PRINCIPLES OF FORCED CIRCULATION IN HOT WATER HEATING SYSTEMS

(Including Small Bore Installations)

THIRD EDITION

3/6

PRINCIPLES OF FORCED CIRCULATION IN HOT WATER HEATING SYSTEMS

(Including Small Bore Installations)

COPYRIGHT

THIRD EDITION . . January, 1959

Published by

SIGMUND PUMPS LTD

TEAM VALLEY TRADING ESTATE GATESHEAD, 11 ENGLAND

Telephone : GATESHEAD 7-5051 (10 lines) *Telegrams : "SIGMAPUMPS, GATESHEAD"*

CONTENTS

* Tables used in design of Heating Systems

PRINCIPLES OF FORCED CIRCULATION IN HOT WATER HEATING SYSTEMS

This manual is not intended as a treatise on the subject nor is it intended to displace the many authoritative books of reference. We have endeavoured to give merely an outline of the principles involved as applied to the smaller type of installation in buildings of orthodox construction requiring average conditions which would benefit from forced circulation.

Practising heating engineers will be conversant with all the information in this manual. It is intended to bring together for quick reference and easy calculation the necessary data to deal with these smaller, straightforward installations. It in no way attempts to replace the methods necessary to overcome the complexities of the larger type of installation.

The pipe sizing information must not be used for gravity circulation which requires larger pipes.

It is not possible to accept responsibility for the information contained in this manual which is given in good faith.

This revised edition includes particular reference to the design and installation of small bore heating systems which have now become so widely accepted.

We wish to acknowledge the considerable assistance of Mr. J. C. Knight, A.M.I.Mech.E., M.I.H.V.E., and of the British Coal Utilisation Research Association (in particular Dr. S. A. Burke, A.R.C.S., B.Sc., Ph.D., M.Inst.F., and Mr. D. V. Brook.)

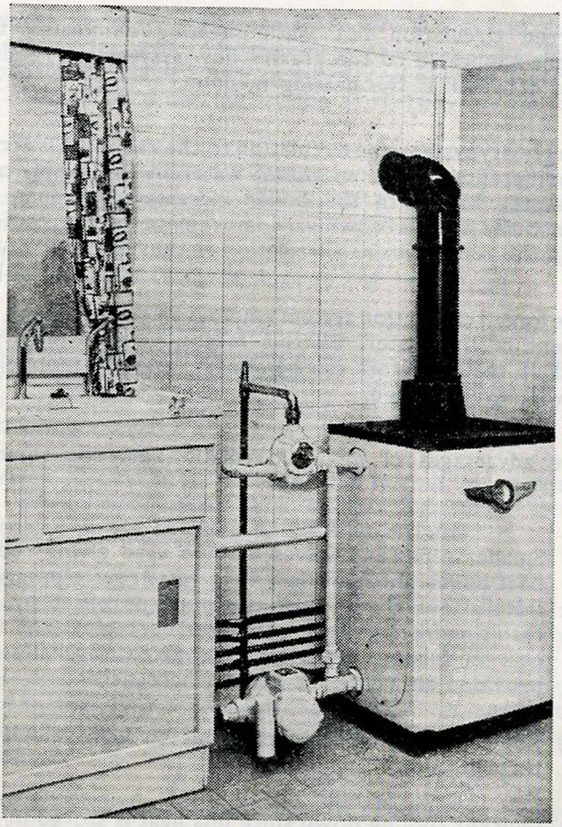

Fig. 1

ThermoPak and SigMix installed in a small bore heating system.

PRINCIPLES OF FORCED CIRCULATION IN HOT WATER HEATING

Forced circulation hot water heating eliminates the major objections applicable to the gravity flow system yet retains the advantages of water as the heating medium.

In a gravity system, the circulation to the radiators is accomplished by the difference in the weight of water in the supply and return main. Water heated in the boiler increases in volume and rises simultaneously with a downward movement of the cooler heavier water in the return main. Circulation is thus set up.

The forced circulation system employs an electric pump to provide movement of the water. By this means, circulation is so greatly speeded up that radiators can be almost instantly supplied with hot water whenever needed.

The advantages of forced circulation may be summarised as follows :—

(a) Smaller pipes and valves may be used giving reduced cost, neat appearance and low heat loss from pipes. With many installations the cost of the pump is offset by the saving resulting from the use of smaller bore pipes and fittings and cost of labour. Pipes may be fitted regardless of levels, provided air vents are fitted where necessary.

(b) Rapid heating up from cold due to high velocity of water through pipes.

(c) Quicker cooling down since less heat is stored in the mains.

(d) Better control by thermostatic operation of the pump or a mixing valve in the pipe circuit providing automatic adjustment of the heating system to maintain an equable temperature inside the building.

(e) As a result of the above a saving in fuel consumption can be made as compared with gravity circulation specially in buildings intermittently heated.

SMALL BORE CENTRAL HEATING SYSTEMS

In previous editions this section was confined to the basic principles involved in this type of heating system.

Experience on an extensive scale has shown that the operation, increased efficiencies, and reduction in installation costs, predicted by the pioneers, have been fully justified, resulting in a very much wider use of small bore central heating as the best means of house comfort.

Briefly, a small bore heating system consists of a boiler to which the radiators are connected by means of ½″ copper pipe. The ½″ diameter pipes are arranged in convenient circuits and connected to the boiler by means of common flow and return pipes, usually of 1″ bore, depending on the total load of the system.

Light gauge copper pipe is now recognised as the most suitable material for small bore installations. Due to its easier manipulation it is usually cheaper to install and it has, of course, a very neat appearance and a large heat carrying capacity. Installation is very simply carried out using capillary or compression type joints.

The water is circulated through the system by means of an electrically driven accelerator such as the Sigmund ThermoPak, which is situated in the common flow or return pipe.

For ideal comfort, finger tip control and economy, it is recommended that the system should include an automatic valve such as the SigMix mixing valve. This valve is simply fitted in a bye-pass, and at a touch the water temperature throughout the heating system can be varied, and will then be controlled at the selected temperature. This control is entirely independant of the boiler temperature which can be maintained at a high level, and supply really hot water for domestic uses.

In order to provide a precaution against overheating of the boiler, this type of system, if utilizing solid fuel, must be combined with a gravity fed, indirect, domestic hot water cylinder, which will absorb excess heat whilst the boiler controls adjust the burning rate.

The Accelerator most generally used for small bore installations in houses of up to approx. 1,800 sq. ft. floor area, is the ThermoPak CR1—B. For larger small bore installations (up to approx. 3,600 sq. ft.) the ThermoPak type CP2—H should be used. The circuit lengths and loading permissible with this unit must be calculated as shown in example 1.

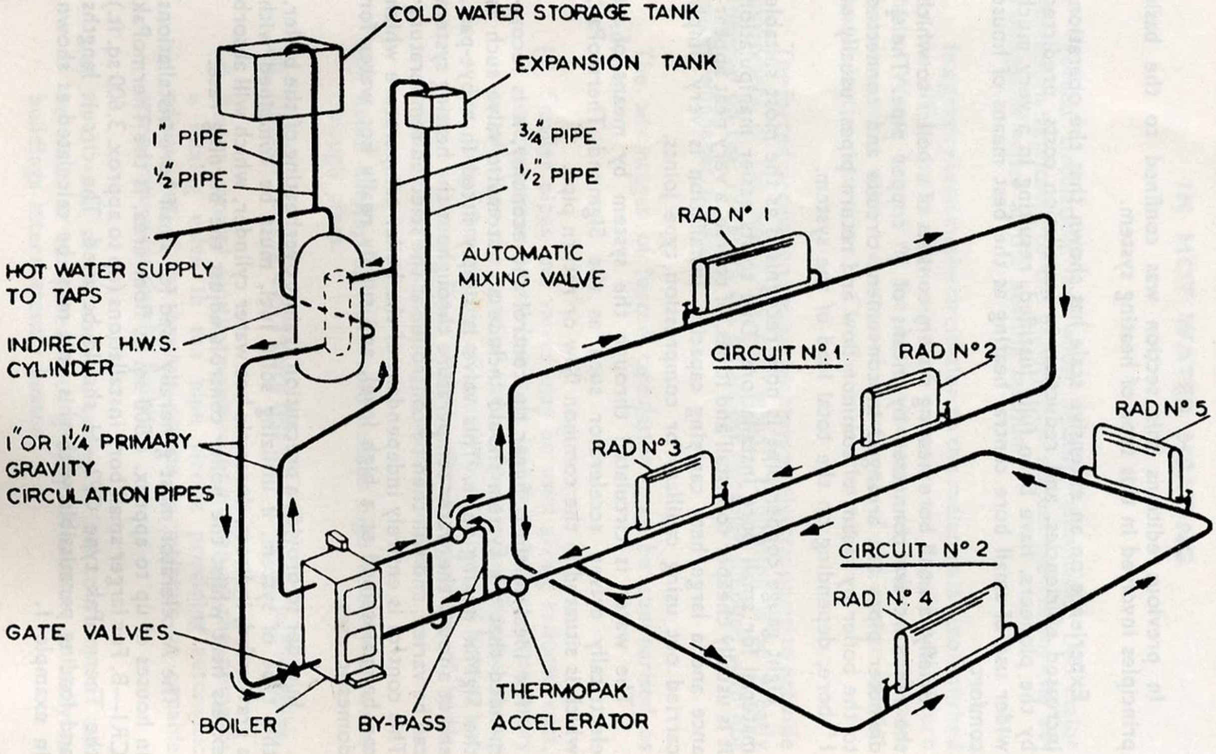

Fig. 2. Typical layout of small bore forced circulation heating system

DESIGN GUIDE FOR SYSTEMS UP TO 60,000 B.t.u./hr. Excluding D.H.W.S.

This method may be used for houses with 11″ cavity brick walls, slate or tile roofs, insulation in roof space and with normal design features for windows and doors.

In other cases, it is necessary to calculate heat requirements from first principles as detailed in example 1. (Page 18).

Installations based on this design require ThermoPak type CR1—B which is suitable for 200/250v, 50 cycle, single phase electric supply.

Step 1. Calculate the room heat requirements as shown at the foot of page 11.

Step 2. Determine the radiator size by dividing the room heat requirements by the heat emission factor of the radiators to be used (see Table 6 page 52) this radiator size may be reduced by 1 sq. ft. for every 5 ft. of ½″ copper pipe exposed in the room.

Step 3. Position the radiators and design the piping layout keeping the heating load and the lengths of circuits within the dimensions shown below.

Heat Load per circuit	Max. length of copper pipe per circuit (½″ diam.)
15,000 B.t.u.'s/hr.	80 ft.
12,000 B.t.u.'s/hr.	100 ft.
10,000 B.t.u.'s/hr.	140 ft.

Generally it is possible to design the pipe layout simply by using the above figures as a guide, increasing the pipe dia. to ¾″ in sections where either the above loading or pipe length is exceeded.

These figures allow for a common flow and return in 1″ dia· copper pipe. the total length of 1″ pipe should not exceed 100 ft. for systems up to 40,000 B.t.u.'s/hr. or 60 ft. for systems up to 60.000 B.t.u.'s/hr.

Step 4. The necessary boiler rating is calculated by adding together all of the room heat requirements, plus the losses from any pipework not exposed in the rooms, plus the domestic hot water requirements and finally adding a further 25% above the figure obtained to allow for extreme cold weather conditions etc.

DESIGN GUIDE FOR SYSTEMS OVER 60,000 B.t.u.'s/hr. EXCLUDING D.H.W.S.

(and for houses of other than traditional construction)

Heating Engineers vary in their opinions on the best procedure to follow when designing heating installations. The following order is used by many Heating Engineers.

Step 1. Determine the heat requirements (Pages 10, 11 and Tables 1, 1A, 2 and 2A).

Step 2. Design the piping and radiator layout and position boiler. (Pages 12 and 13).

Step 3. Determine the head loss in the index circuit (Pages 14, 15 and 45).

Step 4. Select the pump (Page 16 and 47).

Step 5. Select the boiler (Page 16).

STEP 1 — DETERMINE THE HEAT REQUIREMENT

In any building there is a continual loss of heat from all exposed surfaces and because of air changes caused by infiltration. Therefore, the amount of heat which must be furnished by the heating system is dependant upon these factors. The greater the difference between the inside and outside temperature the greater must be the capacity of the heating plant. Heat loss is measured in B.t.u's. per hour.

In this country heating installations are designed to maintain a pre-determined comfort temperature with an outside temperature of 30°F. Table 1A (page 41) recommended internal temperatures for various types of rooms.

Reference to the Institution of Heating and Ventilating Engineers " Guide to Current Practice " should be made for detailed information on various co-efficients to be used in the calculation of heat requirements.

Table No. 1 (page 39) is an extract and gives the 'U' factors for the more common types of building construction.

The wall, floor and ceiling co-efficients give the amount of heat in B.t.u's. that will, in one hour, be transmitted through a square foot of the surface of the room per °F of temperature difference.

Wind pressure causes movement of air through a building from windward to the leeward side. Heated inside air is thus displaced by the infiltration of cold outside air through the cracks round the doors and windows. This infiltration of air must be considered when calculating the heating load. Table No. 1A also includes recommendations of the number of air changes per hour to be included for various types of rooms.

The volume of the room should be calculated and the total air to be heated is the volume multiplied by the hourly air change in the room.

To summarise, the first step in designing a heating installation is to determine the heat losses from the areas and volumes of the rooms as follows :—

Gross Wall Area	Only walls exposed to the outdoors or unheated space
Window Area	Based on the outside measurement or the sash.
Door Area	Based on the actual size of the door.
Nett Wall Area	Gross Wall area minus the area of the windows and doors.
Ceiling Area	Ceiling exposed to unheated space.
Floor Area	Floor exposed to unheated space.
Infiltration	Based on the volume of the room. The volume is multiplied by the air change per hour and the answer is the total air per hour required i.e. the infiltration.

Table I gives the co-efficients for various constructions of walls, ceilings, floors, windows and doors. Heat losses for the appropriate areas are calculated by multiplying the area by these coefficients times the temperature rise required.

The heat losses for the air changes in the various rooms (infiltration) are calculated by multiplying the volume of the room by the number of air changes per hour required times the temperature rise times .02 B.t.u. which is the heat required per hour to raise one cubic foot of air 1 °F.

The temperature rise is the difference between outside temperature (usually taken as 30 °F), and the desired room temperature. The total of all these losses is the heat required per hour.

Approximate Method of Calculation by Volume Only.

It is recommended that the heat requirements for each room to be heated should be properly calculated but as a guide an approximation of the heat requirements for various temperature rises (outside to inside) is as follows :—

35 °F rise—4.3 B.t.u's. per cubic foot of the room.
30 °F rise—3.7 B.t.u's. per cubic foot of the room.
25 °F rise—3.1 B.t.u's. per cubic foot of the room.
20 °F rise—2.5 B.t.u's. per cubic foot of the room.

This approximation is based on normal average house construction with 11″ cavity walls plastered inside, two external walls per room and normal sized windows.

For rooms with three external walls or large windows, the above figures should be increased by 25%.

STEP 2—DESIGN THE PIPING AND RADIATOR LAYOUT AND POSITION THE BOILER

Make a sketch of the system layout as required with all pipe runs and radiators shown, also the boiler. The sketch will be used for calculating pipe sizes.

Determine the number of circuits required to serve the various rooms in which radiators are to be installed. This will depend on the design of the structure and the number of radiators required. Circuits should be short and direct as possible.

The circuit offering the greatest resistance to flow only is used in determining the pump head required. This is referred to as the "index circuit."

The heat requirement of each room having been calculated and the heat load of each circuit determined, this total in B.t.u.'s should be divided by 20 (the designed temperature drop) to give the water requirements of the circuit in lbs/hr.

Reference to the pipe sizing table No. 3 page 45 will show the sizes of pipes required to carry the loads calculated, (It is not advisable for the water velocity to exceed 36″ per second). The heat emission in B.t.u's. from each pipe can then be subtracted from the total B.t.u's. required to heat the room. The difference between the total heat required and the heat emitted from the exposed pipes will be the heat to be supplied by the radiators. Table 6 page 52 deals with heat emission from various sized pipes and radiators.

Provided that precautions are taken to free the system from air by fitting air vents at all high points and grading the pipe lines to these points, a forced system of circulation may be installed regardless of levels. No damage will occur so long as there is sufficient water in circulation through the system, or part of the system such as the hot water cylinder Example 2 to prevent overheating of water in the solid fuel boiler.

In forced circulation hot water heating systems having more than one circuit, the total friction head of the index circuit only, and the volume of water which has to be circulated to satisfy all the heating circuits are considered to determine the duty of the pump. The total equivalent length of a circuit is, of course, the actual length of the circuit plus an allowance for resistance of bends and radiators, etc.

The index circuit only is selected to determine the pump head as it offers the greatest resistance to the flow of water. Therefore, the pump head is sufficient for this circuit and the same pump head is available for all the other circuits.

At this stage it should be explained that circulating pressure should not be confused with static pressure as they have no relationship. Static pressure is created by the weight of water in the system and is equal to 0.43 lbs. per foot of height, e.g. if the feed and expansion tank is 20 ft. above the altitude gauge on the boiler the static pressure at the gauge will be 20 ft. or 20 × 0.43 = 8.6 lbs. per square inch.

Static pressure has no effect on pump capacity. If you will consider the Hot Water Heating System as being an upright loop of water the static pressure in one of the vertical pipes of the loop is identical with the pressure at the same level in the opposite vertical pipe.

When the pump is not working the static pressure at the point where the pump is installed is therefore exactly equalised by the pressure at the same level in the opposite side of the loop. Hence the capacity of the pump is limited only by the friction in the pipes.

It will generally be found easiest to connect the vent and cold water feed pipe to the gravity circuit. This is not essential provided both are connected at one side of the ThermoPak. If the ThermoPak is situated between these two connections there is a possibility that water will be pumped out or air drawn in through the vent.

STEP 3 — DETERMINE THE HEAD LOSS IN THE INDEX CIRCUIT

It will be readily understood that the head loss in the index circuit due to friction (and consequently the accelerator head required) depends on the following factors :—

1. Pipe material.
2. Pipe diameters.
3. Quantity of water circulating.
4. Length of circuit.
5. Number and type of fittings etc.

Assuming the pipe material has been decided on and the diameters and lengths of the pipe runs provisionally settled, as detailed in Step 2, it will be possible to tabulate the various sections of the index circuit as shown on Page 23.

Mark on the sketch of the system the heating loads to be carried by the various sections of pipe (allowing for any pipe heat losses not usefully employed), and convert these loads from B.t.u.'s/hr., to lbs. of water per hour, by dividing by the normal desired temperature drop of 20 °F.

Once having converted the heating loads into quantities of water, it is then possible, by referring to Table 3, Page 45, to determine the frictional resistance per 10 ft. of the various sections of the circuits with their respective loading.

The total friction losses of each section of the index circuit are then added together to obtain the head loss throughout the circuit, but an allowance must be made for the added resistance to flow from valves and fittings etc., incorporated in the circuit.

Obviously the amount of friction resistance from fittings, etc., will depend on the number and type used in the installation, but for normal purposes it is usually sufficient to allow a margin of 25% over the calculated head loss.

The following table is given as a guide and shows typical index circuit head losses and suitable accelerator types associated with various total central heating capacities.

Total Load on System B.t.u.'s/hr.	Pump Type	Index Circuit Head loss in inches of water	Pump Branch Size
Up to 50,000	CR1—H1	25″	1″ BSP
	CA1—H1	10″	1¼″ „
50,000 to 100,000	CR1—B1	54″	1″ „
	CA1—B1	30″	1¼″ „
100,000 to 150,000	CP2—H1	90″	1¼″ „
150,000 to 250,000	CA2—A1 CA2—X1	60″	2″ „
	CA2—G1 CA2—Y1	22″	2″ „

If it is found that the head loss in the index circuit, as first provisionally designed, exceeds the heads shown in the above table by an appreciable amount ; it will be necessary to reduce the friction losses by shortening the lengths of pipe, dividing the system into more circuits or increasing some of the pipe diameters slightly.

In difficult cases when use of the normal 20 °F. temperature drop indicates too high a head loss for suitable accelerators, and it is not desired to increase pipe sizes or alter the layout then a temperature drop of up to 30 °F. may be acceptable. Roughly, basing calculations on a 30 °F. temperature drop instead of 20 °F. has the effect of halving the resultant head loss.

Note: The suffix letter after the pump type indicates the power of motor and voltage for which it is suitable.

KEY FOR SUFFIX LETTER

SUFFIX LETTER	ELECTRICAL SUPPLY	SPEED
A1	230/250 V. 1 PH. 50 ~	2 POLE
B1	210/250 V. 1 PH. 50 ~	
X1	200/220 V. 1 PH. 50 ~	
G1	230/250 V 1 PH. 50 ~	4 POLE
H1	210/250 V. 1 PH. 50 ~	
Y1	200/220 V. 1 PH. 50 ~	
G3	400/440 V. 3 PH. 50 ~	

IMPORTANT POINTS TO NOTICE ARE :—

A. In order to minimise the head loss due to fittings (bends and tees etc.) these should be kept to a minimum using swept rather than square type or bending the pipe if possible.

B. The gravity circulating head has so little effect on a forced circulating system that it may be ignored.

STEP 4—SELECTING THE PUMP

The total B.t.u.'s of water per hour required for the heating system is divided by 12,000 thus converting the water load into gallons per minute.

To limit the pump to this duty would mean that every circuit was expected to take exactly its correct volume of water and no more. This is obviously impracticable and in order to allow a margin to facilitate regulation an addition of 30% should be added to the calculated pump duty for systems with more than one circuit.

The pump head would be that previously chosen to enable the smallest bore pipes to be used for the circuits. No appreciable margin on the head is desirable. The method outlined for calculating pump duty assumes that the heat emission from all pipework is being usefully employed within the room to be heated. The pipework outside the rooms to be heated such as under floors or in roof space must be converted into pounds of water and added to the circuit heating load in the manner described for useful heating surface. The pump capacity must be sufficient to take this additional heating load from pipe surfaces.

When the gallons of water per minute has been established to carry the heating load at a 20 °F temperature drop, reference to the pump capacity Chart No. 4 (page 47) should be made to confirm that the proper size pump has been selected to handle the quantity of water.

Look first at the bottom of the chart where the pump delivery in gallons of water per minute is shown. Run a straight line upwards from the gallons point until it intersects the horizontal line from the resistance head of the system. The point of intersection occurs within the charted area of the nearest size pump for the duty required.

It is not recommended that a pump be selected which has a head capacity much greater than is required by the system because, unless controlled, too much water will be circulated resulting in noisy operation.

Sometimes it is necessary for the pump to be positioned in the flow from the boiler, but it is desirable to have the pump in the return because of the water temperature, appearance and in the case of the small bore system, ease of mounting.

With the pump in return the cold water feed would have to be connected to the system on the discharge side of the pump. If the cold water feed was connected into the suction side of the pump the boiler vent pipe would have to be carried to a height over the feed and expansion tank before turning down, greater than the head of the pump to avoid discharging water with the pump in operation.

STEP 5—SELECTING THE BOILER

The first consideration which must be given to the selection of the boiler is the fuel to be used, Solid Fuel, Oil or Towns Gas. The boiler must of course be suitable for use in line with the makers recommendations.

To provide for possible forcing of the boiler during extremely cold weather and ease of stoking during normal use most Heating Engineers add a margin of 20% to 30% to the nett calculated heat requirements when deciding the size of the boiler.

EXAMPLES

The following are three types of simple central heating systems illustrating the suggested method of calculation and layout.

Example 1. Typical small bore heating system.

Example 2. A straightforward single pipe single loop system incorporating an indirect cylinder for domestic hot water.

Example 3. A simple two pipe system showing how to size the pipes and circulator for more than one loop.

EXAMPLE 1

SMALL BORE HEATING SYSTEM

It is recommended that this method of design be used for houses with other than traditional construction, i.e. large windows and doors, un-insulated roof spaces or walls other than 11″ cavity brick.

Step 1. **Calculate the heat requirements** for the various rooms by measuring the individual areas and calculating the heat loss for the temperature required using the ‘U’ factors shown in Table 1. (Page 39).

The heat loss for the requisite amount of air changes (Table 1A) must also be allowed for as shown in the calculations below.

LOUNGE

Description	Temp. Rise °F	‘U’ Factor B.t.u.'s/hr./°F /Unit Dim	Calculation Vol. or Area × U Factor × Temp. Rise	Heat Losses B.t.u.'s/hr.
Infiltration (1½ air changes/hr.) ..	35	.02	12′ × 23′ × 8.5′ × 1.5 × .02 × 35	2463
S.E. Wall (11″ cavity brick)	35	.33	12′ × 4.5′ × .33 × 35	623
S.W. Wall (11″ cavity brick)	35	.33	(23′ × 8.5′) — (3′ × 4′) × .33 × 35	2119
N.W. Wall (11″ cavity brick) ..	35	.34	[(12′ × 8.5′) — 30] × .34 × 35	856
S.E. Window (single glaze)	35	.88	12′ × 4′ × .88 × 35	1478
N.W. Window (single glaze)	35	1.0	30 × 1 × 35	1050
S.W. Window (single glaze) ..	35	.88	3′ × 4′ × .8 × 35	336
Floor (Wood block on concrete) ..	35	.15	12′ × 23′ × .15 × 35	1449
Ceiling (Plaster, slate and felt roof) ..	35	.3	12′ × 23′ × .3 × 35 divided by 2 *	1449
*Divide by 2 because only half of ceiling has unheated roof space above			Total B.t.u.'s/hr. Required ..	11,823

DINING ROOM

Infiltration (1½ air changes/hr.) ..	35	.02	10′ × 9.5′ × 8.5′ × 1.5 × .02 × 35	847
N.W. Wall (11″ Cavity brick) ..	35	.34	[(10′ × 8.5)—(4′ × 3′)] × .34 × 35	868
N.W. Window (Single glaze) ..	35	1.0	4′ × 3′ × 1 × 35	420
Floor (terrazzo on concrete)	35	.2	10′ × 9.5′ × .2 × 35	665
Ceiling (plaster, slate and felt roof) ..	35	.3	10′ × 9.5′ × .3 × 35	997
			Total B.t.u's/hr. required	3,797

BEDROOM 1

Description	Temp. Rise °F	'U' Factor B.t.u./Hr./°F /Unit Dim	Calculation Vol. or Area × U Factor × Temp. Rise	Heat Losses B.t.u./hr.
Infiltration (1½ air changes/hr.) ..	25	.02	10.5′ × 12.5′ × 8.5′ × 1.5 × .02 × 25	836
S.W. Wall (11″ Cavity Brick) ..	25	.33	12.5′ × 8.5′ × .33 × 25	876
S.E. Wall (11″ Cavity Brick)	25	.33	[(10.5′ × 8.5′)—(4′ × 3′)] × .33 × 25	637
N.E. Wall (11″ Cavity Brick) ..	25	.34	12.5′ × 8.5′ × .34 × 25	903
Floor (wood on joists)	25	.3	10.5′ × 12.5′ × .3 × 25	984
Ceiling (plaster, slates and felt roof) ..	25	.3	10.5′ × 12.5′ × .3 × 25	984
			Total B.t.u.'s/hr. Required	5,220

BEDROOM 2

Infiltration (1½ air changes/hr.) ..	25	.02	12′ × 11′ × 8′ × 1.5 × .02 × 25	792
S.E. Wall (plaster, slate and felt roof)	25	.3	12′ × 8′ × .3 × 25	720
N.E. Wall (11″ cavity brick)	25	.34	[(11′ × 8′)—(3′ × 4′)] × .34 × 25	646
N.W. Wall (plaster, Slate and felt roof	25	.3	12′ × 8′ × .3 × 25	720
N.E. Window (single glaze)	25	1.0	3′ × 4′ × 1 × 25	300
Ceiling (plaster, slate and felt roof) ..	25	.3	12′ × 11′ × .3 × 25	990
Floor (Wood with plaster ceiling under)	10	.29	12′ × 11′ × .29 × — 10 (Heat Gain)	— 382
			Total B.t.u.'s/hr. required	3,786

BEDROOM 3

Infiltration (1½ air changes/hr.) ..	25	.02	[(12′ × 11′) + (2.5′ × 6.5′)] × 8 × 1.5 × .02 × 25	890
S.E. Wall (plaster, slate and felt roof)	25	.3	12′ × 8′ × .3 × 25	720
S.W. Wall (11″ cavity brick)	25	.33	11′ × 8′ × .33 × 25	726
N.W. Wall (plaster, slate and felt roof)	25	.3	[(12′ × 8′) — (5′ × 2.5′)] × .3 × 25	626
N.W. Window (single glaze) ..	25	1.0	5′ × 2.5′ × 1.0 × 25	312
Ceiling (plaster, slate and felt roof) ..	25	.3	[(12′ × 11′) + (2.5 × 6.5′)] × .3 × 25	1,111
Floor (wood with plaster ceiling under)	10	.29	[(12′ × 11′) + (2.5′ × 6.5′)] × .29 × — 10 (Heat Gain)	— 429
			Total B.t.u.'s/hr. Required	3,956

HALL

Infiltration (2 air changes/hr.) ..	35	.02	7′ × 13′ × 8.5′ × 2 × .02 × 35	1,083
S.E. Wall (11″ cavity brick)	35	.33	4′ × 8.5′ × .33 × 35	393
S.E. Door (glass)	35	.88	6.5′ × 3′ × .88 × 35	600
Floor (wood block over concrete) ..	35	.15	7′ × 13′ × .15 × 35	477
Ceiling (plaster)	35	.29	7′ × 13′ × .29 × 35	923
			Total B.t.u.'s/hr. Required	3,476

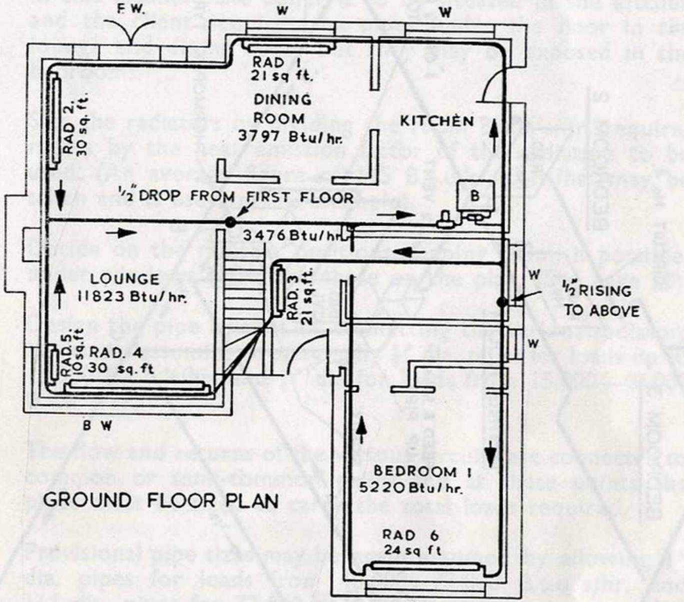

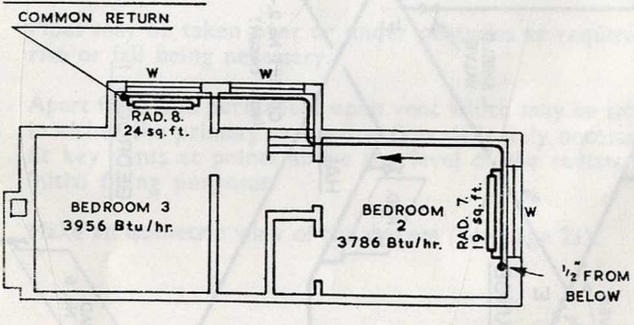

FIRST FLOOR PLAN

SCALE APPROX ⅛" = 1'

PLAN SHOWING POSITION OF RADIATORS AND PIPE RUNS

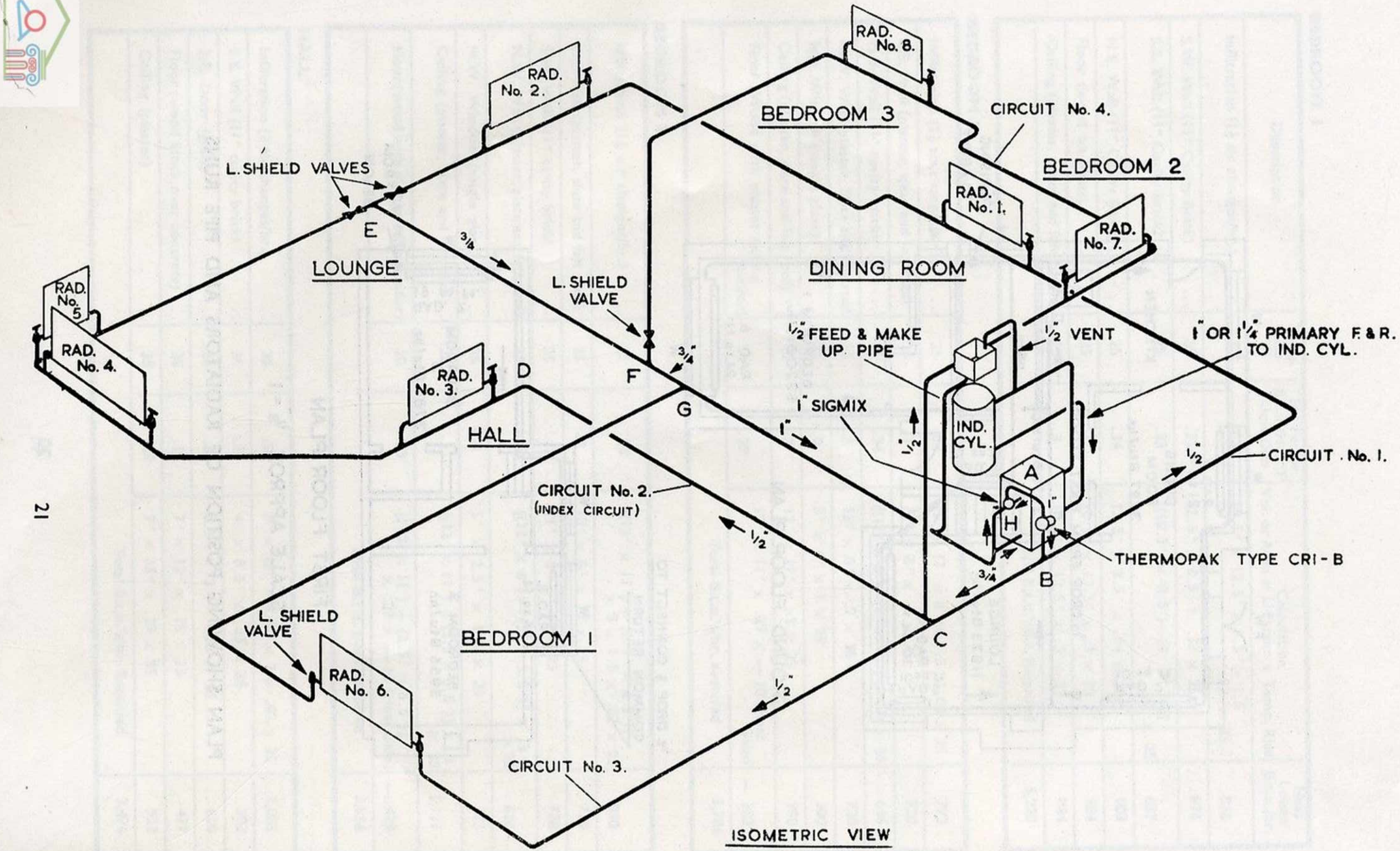

DIAGRAM SHOWING COMPLETE SMALL BORE LAYOUT.

Step 2. Design the piping and radiator layout

In this example the boiler is to be situated in the kitchen and the client requires the pipes under the floor in the lounge and dining room but they may be exposed in the bedrooms.

Size the radiators by dividing the room B.t.u.'s/hr. requirements by the heat emission factor of the radiators to be used. (An average figure of 165 B.t.u.'s/sq. ft./hr. may be taken and is used in this example).

Decide on the radiator positions keeping them, if possible, under windows and mark these on the plan. (See page 20).

Design the pipe circuits by connecting the various radiators in circuits assuming provisionally $\frac{1}{2}$″ dia. pipes for loads up to 15,000 B.t.u.'s/hr. and $\frac{3}{4}$″ dia for loads from 15,000—40,000 B.t.u.'s/hr.

The flow and returns of the various circuits are connected to common or semi-common mains and at these points the pipes must be sized to carry the total loads required.

Provisional pipe sizes may be again assumed by allowing 1″ dia. pipes for loads from 40,000—72,000 B.t.u.'s/hr. and $1\frac{1}{4}$″ dia. pipes for 72,000—120,000 B.t.u.'s/hr.

Pipes may be taken over or under obstacles as required, no rise or fall being necessary.

Apart from one permanent open vent which may be situated in either the primary or heating flow, it is only necessary to fit key vents at points above the level of the radiators for initial filling purposes.

Make an isometric view of the system (See page 21).

Step 3. Determine the ThermoPak required.

For small bore heating systems of up to 60,000 B.t.u.'s/hr this presents no problem because, providing the lengths and loading of the circuits do not exceed the figures shown on page 8, ThermoPak type CR1—B will be suitable.

For larger systems, or those using heaters other than normal radiators, the ThermoPak type should be determined by calculating the necessary duty as follows :—

Capacity. This is calculated in gallons per min. by dividing the total heating load by 12,000 and adding a margin of 30% to facilitate balancing the system, and for extreme weather conditions.

e.g.	Lounge	11823
	Dining Room	3797
	Bedroom 1	5220
	Bedroom 2	3786
	Bedroom 3	3956
	Hall	3476
	56′—½″ copper pipe at 22 B.t.u.'s/ft.	1260
	24′—¾″ copper pipe at 28 B.t.u.'s/ft.	670
	total	33,988 B.t.u.'s/hr.

$$\frac{33,988}{12,000} = 2.83 + 30\% = 3.68 \text{ say } 4 \text{ g.p.m.}$$

Head. The necessary head must be determined by calculating the frictional resistance through the index circuit.

Mark the various loads including the pipe losses on the diagram as shown on pages 20 and 21, letter what appears to be the index circuit (i.e. the circuit requiring the greatest head) and calculate the losses through the various sections as shown using the friction loss figures given in Table 3 (page 45).

The total figure obtained must then be increased by 25% to allow for the resistance due to bends and valves etc.

Sect.	Length	Dia.	Load B.t.u.'s/hr.	Frictional Resist./10′	Friction Loss
A—B	30′ *	1″	33,988	1″	3.0″
B—C	4′	¾″	25,110	2.6″	1.1″
C—D—E	60′	½″	10,225	3″	18.0″
E—F	13′	¾″	20,363	1.4″	1.8″
F—G	9′	¾″	28,765	3″	2.7″
G—H	10′	1″	33,988	1″	1.0″
				Total	27.6″
				+ 25% =	36″ approx

Required duty will therefore be **4** g.p.m. at **3** ft. head and ThermoPak type CR1—B should be used.

* Includes 25′ equivalent length for Sigmix Valve.

Step 4. **Calculate necessary boiler rating**

This is done by adding the load for domestic hot water requirements to the total central heating load already determined. (For approximately 2 hour re-heat cycle this load can be taken as 500 B.t.u./hr./gallon of cylinder capacity).

To this total must be added a margin of 25% for extreme weather conditions.

e.g. Central heating requirements	33,988
Domestic Hot Water (30 gallon cylinder)	15,000
Total	48,988
+ 25% =	61,000 B.t.u./hr.

Boiler rating required = 61,000 B.t.u./hr.

(In practise it would of course be considered adequate to select a boiler of 60,000 B.t.u./hr. rating in this instance).

Note : It should be realised that there may be other incidental heat losses or gains not accounted for but, as the actual heat requirements will vary slightly according to the use of the building (opening of windows and doors, number of occupants etc.), only the major heat losses or gains need be calculated.

EXAMPLE 2

SINGLE PIPE SINGLE LOOP HEATING SYSTEM

(Incorporating D.H.W. System)

Step 1. In this example, the house is one of traditional construction and the method of calculating heat losses by volume is therefore followed.

Room 1. 1250 cu.ft. × 3.7 B.t.u./cu.ft. = 4625 B.t.u./hr.
,, 2. 1314 ,, × 4.3 ,, = 5650 ,,
,, 3. 500 ,, × 2.5 ,, = 1250 ,,
,, 4. 1620 ,, × 2.5 ,, = 4050 ,,
,, 5. 1250 ,, × 2.5 ,, = 3125 ,,
Total 18700 ,,

Step 2. The pipe system with radiators and boiler is sketched on the plan.

Length of circuit from A to B ..... = 130 ft.
Allowance for resistance of bends, tees, radiators and boiler—add 25% ..... = 32 ft.
162 ft.

Step 3. The pipes are sized by converting the heating load into lbs. of water per hr. by dividing by 20 °F, which is the temperature drop between flow and return.

therefore $\frac{18700}{20} = 935$ lbs/hr.

Referring to the friction loss in pipes, Table No. 3 on page 45, for nominal bore Class B black steel pipe, it will be seen that for a quantity of 935 lbs. of water per hr. $\frac{3}{4}$″ bore pipe will have a friction loss of 1.3″ per 10 ft. The velocity is seen to be between 12″ and 24″ per second.

EXAMPLE 2

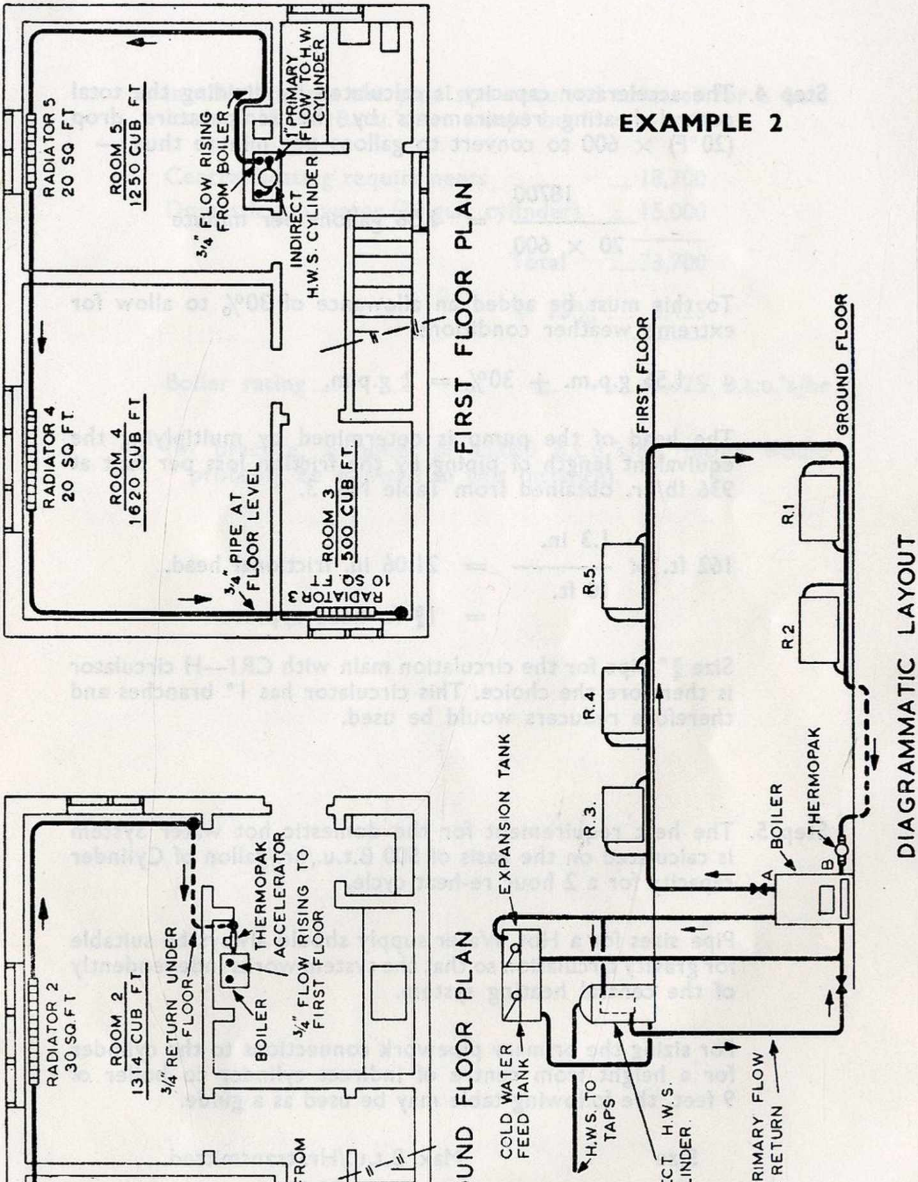

Fig. 4

Single Pipe Single Loop Heating System
Incorporating D.H.W. System

Step 4. The accelerator capacity is calculated by dividing the total central heating requirements by the temperature drop (20 °F) × 600 to convert to gallons per minute thus :—

$$\frac{18700}{20 \times 600} = 1.56 \text{ gallons per minute}$$

To this must be added an allowance of 30% to allow for extreme weather conditions.

$$1.56 \text{ g.p.m.} + 30\% = 2 \text{ g.p.m.}$$

The head of the pump is determined by multiplying the equivalent length of piping by the friction loss per foot at 936 lb/hr. obtained from Table No. 3.

$$162 \text{ ft.} \times \frac{1.3 \text{ in.}}{10 \text{ ft.}} = 21.06 \text{ in. frictional head.}$$

$$= 1\tfrac{3}{4} \text{ ft. head approx.}$$

Size $\frac{3}{4}$″ pipe for the circulation main with CR1—H circulator is therefore the choice. This circulator has 1″ branches and therefore reducers would be used.

Step 5. The heat requirement for the domestic hot water System is calculated on the basis of 500 B.t.u./hr./gallon of Cylinder capacity for a 2 hour re-heat cycle.

Pipe sizes for a Hot Water supply should always be suitable for gravity circulation so that the system works independently of the central heating system.

For sizing the primary pipework connections to the cylinder for a height from centre of indirect cylinder to boiler of 9 feet, the following table may be used as a guide.

Size	Max. B.t.u./Hr. transmitted
1″	32,000
$1\frac{1}{4}$″	58,000

This table is an extract from General Information on Page 53.

In this example the pipe size required to cater for a heat load of 15,000 B.t.u.'s/hr. would be 1".

Central heating requirements	 18,700
Domestic hot water (30 gall. cylinder)	 15,000
Total	 33,700
+ 25%	 8,425
Boiler rating	...... 42,125 B.t.u.'s/hr

(In practise, a boiler of 45,000 B.t.u.'s/hr. rating would probably be selected in this instance).

EXAMPLE 3.

TWO PIPE HEATING SYSTEM.

Step 1. Determine the heat loss.

For the purpose of this example the heat required is assessed as needing two radiators each of 12,000 B.t.u's. per hour.

Step 2. Design the piping and radiator layout and position the boiler

Step 3. Determine the pipe sizes.

An approximation is made of the carrying capacity of the pipes for each circuit of the system by taking the emission of the radiator and adding a percentage for emission from the pipework. For a small system it would be reasonable to add 25% for the pipework emission.

$\therefore$ Emission from Rad. 1 and pipework $= 12{,}000 + 25\%$

$$= \frac{15{,}000}{20} = 750 \text{ lbs./hr.}$$

similarly lbs./hr. to be carried by pipes BF and CG

$= 750$ lbs./hr.

Total to be circulated $= 750 + 750 = 1500$ lbs./hr.

Referring to the pipe sizing table No. 3 on page 45 for Class 'B' nominal bore steel pipe and taking the smallest bore pipe to carry the approximated water loads, to provide velocities not exceeding 36" per second the pipe sizes are as follows :—

Pipe	Approx. Load	Size
AB and CH	1500	$\frac{3}{4}$"
BD and CE	750	$\frac{1}{2}$"
BF and CG	750	$\frac{1}{2}$"

The emission from the pipes can now be determined thus.

Radiator 1 + pipework.

$= 12{,}000 + 30' \; 0''$ of $\frac{1}{2}''$ pipe at 56 B.t.u.'s/Ft.

$= 12{,}000 + 1{,}680$

$= 13{,}680$ B.t.u.'s.

EXAMPLE 3

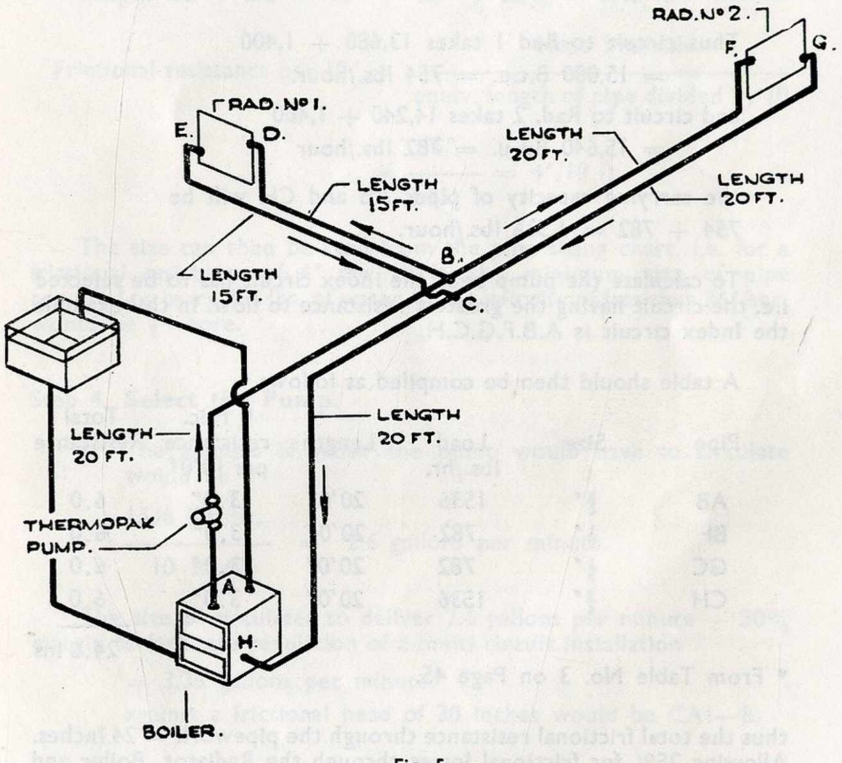

Fig. 5

Two Pipe Heating System.

Radiator 2 + pipework

= 12,000 + 40′ 0″ of ½″ pipe at 56 B.t.u.'s/Ft.
= 12,000 + 2,240
= 14,240 B.t.u./hour

The emission from pipes AB and CH
= 40′ 0″ of ¾″ pipe at 70 B.t.u.'s/Ft.
= 2,800 B.t.u.'s/hour

As pipes AB and CH are common pipes feeding the two circuits of the system the emission will have to be apportioned to each circuit.

Thus circuit to Rad I takes 13,680 + 1,400
= 15,080 B.t.u. = 754 lbs./hour.
and circuit to Rad. 2 takes 14,240 + 1,400
= 15,640 B.t.u. = 782 lbs./hour

the carrying capacity of pipes AB and CH will be
754 + 782 = 1,536 lbs./hour.

To calculate the pump head the index circuit has to be selected i.e. the circuit having the greatest resistance to flow. In this example the Index circuit is A.B.F.G.C.H.

A table should then be compiled as follows

Pipe	Size	Load lbs./hr.	Length	* Fric. resistance per 10′0″	Total Resistance
AB	¾″	1536	20′0″	3.0″	6.0
BF	½″	782	20′0″	3.0″	6.0
GC	½″	782	20′0″	3.0″	6.0
CH	¾″	1536	20′0″	3.0″	6.0
					24.0 ins

* From Table No. 3 on Page 45.

thus the total frictional resistance through the pipework = 24 inches. Allowing 25% for frictional losses through the Radiator, Boiler and pipe fittings.

Total head = 24.0 + 25%
= 30 inches.

All other circuits on the system would then be sized on the pump head available at the points where the circuit connects to the common mains.

Thus the head available for circuit to Radiator I

= Head lost in pipes AB and CH—
= 6″ + 6″ plus 25% = 15″.

which gives us 30″ – 15″ = 15″.

The equivalent length of piping for this circuit is calculated—

Length CE + DB = 15′ + 15′ + 25% = 37.5 ft.

$$\text{Frictional resistance per } 10' = \frac{\text{Head available}}{\text{equiv. length of pipe divided by } 10}$$

$$= \frac{15''}{3.75} = 4''/10 \text{ ft.}$$

The size can then be read from the pipe sizing chart. i.e. for a frictional resistance of 4″ per 10 ft. the minimum size of pipe required to carry 754 lbs. of water with a velocity of less than 36″/sec. would be ½″ bore.

Step 4. **Select the Pump.**

The amount of water the pump would have to circulate would be

$$\frac{1536 \text{ lbs./hr.}}{10 \times 60} = 2.6 \text{ gallons per minute.}$$

The size of circulater to deliver 2.6 gallons per minute + 30% margin to facilitate regulation of a multi circuit installation
= 3.38 gallons per minute.
against a frictional head of 30 inches would be CA1—B.

Step 5. **Select the Boiler.**

A suitable boiler is chosen with a margin of power of usually 25% over actual calculated heat emission from all surfaces.

IMPROVEMENT OF EXISTING GRAVITY HEATING INSTALLATIONS BY THE ADDITION OF A CIRCULATING PUMP

Many early heating installations in schools, private houses, business premises and Churches are inadequate according to modern standards for providing reasonable comfort. Most of these installations are designed for gravity circulation with a temperature drop between flow and return of 40 °F. Because of the design and type of materials used in the system, frequently it is difficult to increase the heating surface to improve the temperature rise in the building because existing heating surfaces consist of large bore cast iron pipes fitted one above the other, sometimes, three or four pipes high along the walls of the building. Additional pipe coils or radiators connected to the existing arrangement would be unsightly and if undertaken would mean considerable alteration to furniture or pews.

A ready means of improving the heating is by the inclusion of a pump in the system.

The pump would be selected to operate the system with a 20 °F. temperature drop (or less) between flow and return. This increases the mean temperature of the system and consequently the heat output from the same system.

After determining the B.t.u.'s load of the system by reference to Table 6 (page 52) which deals with heat emission from various sized pipes and radiators, and multiplying the lengths of pipes and radiator surface by the appropriate B.t.u. emission, Steps 3 and 4 (pages 14—16) should be followed to arrive at the pump delivery and head.

Of course, with an existing system the pipe sizes are already known and by reading off the Pipe Sizing Table No. 3 the known load carried by the pipe, reading across the chart, will give the friction loss in inches of W.G. per 10 lineal feet. The total friction of the index circuit will be the circulating head of the pump.

It should be clearly understood that the pump should be chosen for the required duty without regard to the size of pipe. With an existing gravity installation the existing pipe line will probably be considerably larger than the pump connections but this will only require suitable connections to adapt the pump into the pipe line and **not** a pump bore chosen to fit into the existing circuit.

A shorter method that has proved to give satisfactory results is to divide the boiler rating expressed in B.t.u./hr. by 12,000. The quotient is the required accelerator capacity in galls/minute.

Select from Chart 4 Page 47 the ThermoPak with the Lowest head for this capacity.

Care should be taken that all water in the system passes through the pump, i.e. if there are a number of circuits connected direct to the boiler the flow connections can remain but the returns must be connected together into a common header and from this header a single pipe connection taken to the boiler. The pump would be fitted into this common pipe.

If it is desired that the pump be connected into the flow from the boiler, then the connecting together of the flow connections would be necessary and the pump fitted into the common flow pipe. The existing returns to the boiler would then remain undisturbed.

In addition to the increased heat output from the same heating surface with the inclusion of a pump, there would also be the advantage of quick heating up and consequent reduction in pre-heating time necessary before the building was to be occupied.

If the existing heating installation consisted of numerous separate circuits varying considerably in length and water carrying capacity, then it may be necessary to fit a control valve (if not already fitted) into the shortest circuits so that the flow of water could be regulated and correctly proportioned over the whole system.

Where fitted, open air vents should be checked to ensure that with the inclusion of a pump, the open pipes do not discharge water with the pump in operation. Some air vents may have to be increased in height or be fitted with hand or automatic air discharge cocks.

AUTOMATIC CONTROL OF FORCED CIRCULATION HEATING SYSTEMS FOR PRIVATE HOUSES

Many boilers of the size used in houses are fitted by the manufacturers with thermostatic devices which allow the boiler to be operated at a constant and pre-determined temperature

With forced circulation systems it is important that such a boiler be used in order to prevent overheating if the pump is inadvertently switched off. In order to prolong boiler life it is not desirable that this control be used to vary the temperature in the heating system and moreover, to cater for the domestic hot water requirement which remains relatively stable without regard to weather conditions, it is desirable that the boiler water temperature be maintained at a constant level of 170/180°F. It is therefore necessary to control the water temperature in the radiator circuits by some other means.

This can be best achieved by allowing some of the cool return water to re-circulate through the heating system with a proportion of hot water from the boiler.

Other forms of control such as intermittent operation of the accelerator control by an air thermostat can be used, but these have certain disadvantages.

A room thermostat can respond only to the temperature of its immediate surroundings and as the occupational requirements of each room vary, some difficulty is generally experienced in siting the air thermostat.

For example the living room represents that part of a house most extensively used during day time and consequently there is justification for siting the Thermostat here. Since however the thermostat responds to increase in temperature due to such factors as direct sunlight, a local fire or the influx of people, the accelerator may be stopped when other rooms need heat. Moreover, switching off the accelerator stops circulation entirely, the radiators cool quickly and therefore air circulation also ceases. In these conditions very wide temperature gradients can occur within the room so that the air temperature in the vicinity of the thermostat bears little relation to that elsewhere in the room. In these circumstances the response of the thermostat can be very inaccurate and conditions can arise where the room becomes stuffy even though air close to the floor is distinctly chilly. There can be little doubt therefore that the best means of maintaining the desired room temperature is to control the heat output of the system by varying the water temperature in the radiators.

A three port mixing valve and boiler by-pass is arranged to achieve this and the amount of cool water allowed to recirculate can be automatically regulated thereby maintaining a pre-determined temperature level at the radiators.

The SigMix automatic mixing valve is designed to fulfil this requirement and to make it easy for the occupants to control room temperature as desired.

The SigMix valve controls the temperature of the inflow to the heating circuits by means of a bi-metal spiral situated in the valve body. The position of the spiral is set by means of a dial on the front cover, so as to give any desired flow temperature between 95 and 194 °F. The bi-metal spiral is sensitive to temperature variations and operates a clack which proportions the amounts of cool and hot water mixing in the valve body.

Should the boiler temperature fluctuate due to combustion conditions the bi-metal spiral will react, alter the positions of the clack and adjust the proportions of water to compensate for the change in boiler temperature. Similar variations in the heating return temperature caused by shutting off or turning on radiators are automatically compensated for.

Another method utilising the principle of mixing proportions of cool return water with the hot flow is the external temperature-sensitive controller developed by B.C.U.R.A.

This is again a type of three port valve which is designed to vary the flow temperature according to outside weather conditions.

A temperature-sensitive phial is situated outside the house and this is connected to the mixing valve by means of a capillary tube. The valve embodies a system of two bellows one of which is operated by the pressure from the outside phial. This in turn regulates the differential pressure on the second bellows which operates the three port valve.

This outside temperature controller which requires a minimum of 4 ft. accelerator head is not affected by changing conditions within the house. Consequently heat supply to the house as a whole is not distorted by incidental heat gains or losses in one room as in the case of the air thermostat control system.

On the other hand the external temperature sensitive controller responds only to the outside temperature in the vicinity of the phial and is in no way sensitive to any heat gains or losses which occur within the house.

SIGMIX AUTOMATIC MIXING VALVES FOR THERMAL CONTROL OF FORCED CIRCULATION IN HOT WATER CENTRAL HEATING SYSTEMS

What it Does

The SIGMIX mixing valve is the easiest way to control the water temperature in the Central Heating System without interfering with the temperature of the hot water supply for washing, etc.

By installing the SIGMIX Valve the domestic hot water supply can be maintained at 160 °F – 200 °F, whilst the temperatures of the heating circuits are controlled at a pre-set level—comfortable at all times of day or night.

With the SIGMIX Valve there is no need for the opening and closing of individual radiators, intermittent operation of the circulator, damping down or other control of the boiler on account of heating needs.

How it Works

The central heating system is provided with a boiler by-pass between flow and return, so that some of the cooler return water can be blended with the hot water from the boiler and re-circulated to maintain a fixed temperature.

The SIGMIX is set to give the flow temperature required in the heating system usually between 95° and 194 °F, depending on the type of installation, weather conditions and the requirements of the occupants. This flow temperature can be varied instantly by adjusting the dial or handle, for example, in milder weather, at night, or when the building is to be unoccupied for a time during the day, thus effecting a considerable reduction in fuel costs.

A bi-metal spiral in the upper part of the valve casing transmits the control movement to the double clack in the lower part, which either opens the inlet port from the boiler and closes the return port from the heating system, or vice versa, so that a mixed flow temperature, ranging from 95 °F to 194 °F can be selected and maintained.

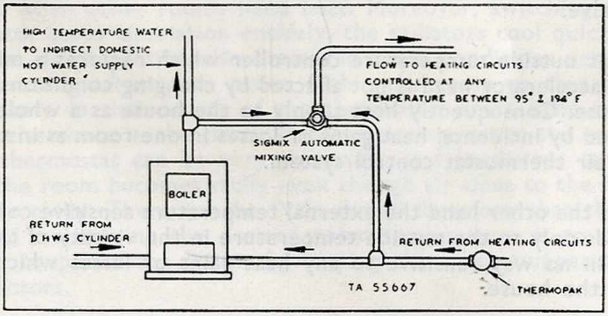

Diagram showing SigMix in a typical domestic installation.

For Small Bore Forced Circulation

The SIGMIX type ' S ' is ideally suited for the small bore forced circulation central heating now so widely advocated, because of the extremely low pressure drop through the valve-equivalent to approximately 20-25 ft. of piping—thus enabling the valve to be installed without any appreciable increase on the head of the circulating pump.

How it is Fitted

Connection ' H ' is for the inlet of hot water from the boiler, connection ' C ' is for the inlet of cool returning water, and remaining connection is for the outlet of mixed water.

As in the case of all apparatus using return water in central heating practice, care must be taken that the pipe for the cooled return water is not connected to the part which is intended for the hot water from the boiler (marked ' H ' on the mixing valve).

The setting of the flow temperature to the desired figure is effected by loosening the hand screw securing the dial or lever and gradually turning, setting the dial to the required position and re-securing. Each full division alters the mixed flow temperature by approximately 10 °F.

The SIGMIX Controller is suitable for operating pressures up to 50 p.s.i. and all moving parts are made of corrosion resistant materials.

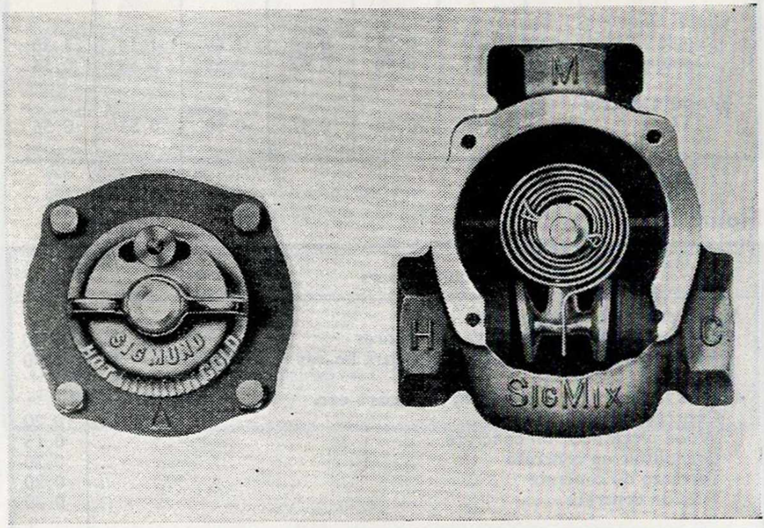

TABLE I

HEAT TRANSMITTANCE CO-EFFICIENTS

Thermal Transmittance U Factors B.t.u.'s/Sq.Ft./Hour/Degree F.

The following co-efficients may be used. Full temperature difference between indoor and outdoor should be taken.

Walls

Orientation	Exposure					
S.	Shelter'd	Normal	Severe			
W : SW : SE		Shelter'd	Normal	Severe		
NW			Shelter'd	Normal	Severe	
N : NE : E.			Shelter'd	Normal		Severe
Brickwork						
Solid, plastered						
9″	0.36	0.38	0.41	0.43	0.45	0.48
13½″	0.30	0.32	0.33	0.35	0.36	0.38
Cavity, plastered						
11″ (unventilated)...	0.27	0.28	0.29	0.30	0.31	0.32
11″ (ventilated) ...	0.30	0.31	0.33	0.34	0.36	0.37
Concrete						
4″	0.55	0.60	0.66	0.71	0.78	0.85
6″	0.49	0.53	0.58	0.63	0.68	0.73
Glass						
Single	0.70	0.79	0.88	1.00	1.14	1.30
Double	0.41	0.44	0.47	0.50	0.53	0.56
Wood t and g						
1″	0.41	0.44	0.47	0.50	0.53	0.56

Floors

Ground Floors	'U'
Ventilated wood floors on joists	
Air bricks on one side only, bare boards	0.30
Air bricks on more than one side, bare boards	0.40
Floors in contact with earth, hardcore etc.	
Concrete	0.20
Wood block floor on concrete	0.15
Granolithic on concrete	0.20
Terrazzo on concrete	0.20
Tiles on concrete	0.20

TABLE I Continued

Floors

Intermediate Floors	Heat Flow	
	Down-wards	Up-wards
Wood floor on joists, plaster ceiling	0.22	0.29
6″ concrete with 2″ screed	0.50	0.57
6″ concrete with 2″ screed with wood flooring	0.33	0.36
6″ hollow tile with wood flooring	0.25	0.29
6″ hollow tile with wood flooring on battens	0.17	0.18

Roofs

Pitched Roofs	Sheltered	Normal	Severe
Corrugated asbestos lined ½″ boards	0.47	0.50	0.53
Corrugated iron lined 1″ boards and felt ...	0.33	0.35	0.37
Tiles on boards and felt	0.33	0.35	0.37
Tiles on battens	1.22	1.50	2.00
Tiles on battens, felted	0.63	0.70	0.78
Plaster ceiling with roof space above			
(a) with tiles and battens	0.50	0.56	0.64
(b) with tiles or slates on boards and felt ...	0.28	0.30	0.32
(c) with tiles or slates on battens and felted	0.36	0.39	0.43

Flat Roofs	Sheltered	Normal	Severe
Asphalt on 6″ concrete	0.58	0.64	0.70
Asphalt on 6″ hollow tile with 2″ cork	0.12	0.12	0.12
Timber roof, covered zinc or lead on 1″ boarding plaster ceiling under	0.17	0.17	0.17

TABLE IA

RECOMMENDED TEMPERATURES AND AIR CHANGES

Room or Building	Temperature °F	Air Change per hour
General Spaces Common to Various Types of Buildings		
Entrace lobbies	60	3
Entrance halls	60	2
Staircases	60	2
Corridors	60	2
Cloaks	60	2
Lavatories	55	2
Bathrooms	60	2
Flats and Residences		
Living Rooms	65	1½
Bed Sitting Rooms	65	2
Bedrooms	50	1½
Service Rooms	60	1
Store Rooms	50	½
Foyers	60	2
Garages		
Public	45	3
Private lock up	45	1
Halls		
For Assembly, Lectures, Meetings and General Purposes	60	1½
Hostels		
Dining Rooms	60	2
Common Rooms	65	2
Dormitories	50	2
Bedrooms	50	1½
Bed Sitting Rooms	60	2
Offices		
General Offices...	65	2
Private Offices	65	2
Stores	50	½
Public Houses		
Bars	60	2
Dining Rooms	65	2
Shops and Showrooms		
Small	60	2
Large	60	1½
Stores Rooms	50	½

TABLE 2

B.t.u.'s/hr. REQUIREMENTS FOR AREAS AND VOLUME

Based on 35°F. difference between indoor and outdoor temperature. For other temperatures see Table 2A.

B.t.u.'s/hr. Required	WINDOW AND DOOR AREAS Sq. Ft.			INFILTRATION ROOM VOLUME IN CU. FT.					WALL, CEILING AND FLOOR AREAS, SQ. FT.										
	'U' FACTORS			No. of Air Changes PER HOUR					'U' FACTORS										
	.4	.7	1.0	.5	1	1.5	2	3	0.04	0.06	0.08	0.10	0.13	0.15	0.16	0.17	0.18	0.19	0.20
50	3.6	2.1	1.5	143	71	47.6	35.8	23.0	35.7	23.8	17.9	14.3	10.9	9.5	8.9	8.4	7.9	7.5	7.1
100	7.2	4.1	2.8	290	142	95	71.5	47.5	71.4	47.6	35.7	28.6	21.9	19.0	17.8	16.8	15.9	15.0	14.3
150	10.5	6.1	4.3	430	214	143	107	71.5	107	71.4	53.6	42.9	32.9	28.5	26.7	25.2	23.8	22.6	21.4
200	14.3	8.1	5.8	570	286	191	143	96.0	143	95.2	71.4	57.1	43.9	38.1	35.7	33.6	31.7	30.1	28.6
250	17.9	10.2	7.1	710	357	238	179	119	179	119	89.3	71.4	54.9	47.6	44.6	42.0	39.7	37.6	35.7
300	21.4	12.3	8.6	856	428	285	214	143	214	143	107	85.7	65.9	57.1	53.6	50.4	47.6	45.1	42.9
350	25.0	14.3	10	1000	500	333	250	167	250	167	125	100	76.9	66.7	62.5	58.8	55.6	52.6	50.0
400	28.6	16.3	11.4	1140	572	380	285	191	286	190	143	114	87.9	76.1	71.4	67.2	63.5	60.1	57.1
450	32.2	18.4	12.9	1280	643	428	317	214	321	214	161	129	98.9	85.7	80.3	75.6	71.4	67.7	64.3
500	34.5	19.7	14.2	1420	715	476	357	239	357	238	179	143	110	95.2	89.3	84.0	79.4	75.2	71.4
550	39.3	22.4	15.7	1570	786	524	394	262	393	262	196	157	121	105	98.2	92.4	87.3	82.7	78.6
600	42.9	24.5	17.0	1710	856	572	429	272	429	286	214	171	132	114	107	101	95.2	90.2	85.7
650	46.5	26.5	18.5	1850	930	619	465	310	464	310	232	186	143	124	116	109	103	97.7	92.8
700	50.6	28.5	20.0	2000	1000	667	500	334	500	333	250	200	154	133	125	118	111	105	100
750	53.5	30.6	21.4	2140	1070	715	535	349	536	357	268	214	165	143	134	126	119	113	107
800	57.2	32.6	22.8	2280	1140	761	572	380	571	381	286	229	176	152	143	134	127	120	114
850	60.6	34.8	24.3	2420	1220	810	608	405	607	405	304	243	187	162	152	143	135	128	121
900	64.3	36.7	25.7	2570	1290	856	643	429	643	429	321	257	198	171	161	151	143	135	129
950	67.9	38.7	27.1	2700	1360	900	670	452	679	452	339	271	209	181	170	160	151	143	136
1000	71.5	40.8	28.5	2860	1430	952	715	476	714	476	357	286	220	190	179	168	159	150	143
1050	75.0	42.8	30.0	3000	1500	1000	750	500	750	500	375	300	231	200	187	176	167	158	150
1100	79.5	45.5	31.5	3140	1570	1050	785	524	786	524	393	314	242	210	196	185	175	165	157
1150	82.2	47.0	32.8	3290	1640	1090	822	548	821	548	411	329	253	219	205	193	183	173	164
1200	85.8	49.0	34.3	3420	1710	1140	856	572	857	571	429	343	264	229	214	202	190	180	171
1250	89.3	51.0	35.8	3570	1790	1190	893	595	893	595	446	357	275	238	223	210	198	188	179
1300	92.8	53.0	37.0	3710	1860	1240	930	620	929	619	464	371	286	248	232	218	206	195	186
1350	96.4	55.1	38.5	3920	1930	1290	965	644	964	643	482	386	297	257	241	227	214	203	193
1400	100	57.2	40.0	4000	2000	1330	1000	668	1000	667	500	400	308	267	250	235	222	211	200
1450	103	59.0	41.5	4140	2070	1380	1040	690	1036	690	518	414	319	276	259	244	230	218	207
1500	107	61.2	43.0	4290	2150	1430	1070	715	1071	714	536	429	330	286	268	252	238	226	214
1550	111	63–4	44–0	4430	2210	1480	1110	738	1107	738	554	443	341	295	277	260	246	233	221
1600	114	65.4	45.6	4570	2290	1520	1150	763	1143	762	571	457	352	305	286	269	254	241	229
1650	118	67.4	47.0	4710	2360	1570	1180	786	1179	786	589	471	363	314	295	277	262	248	236
1700	122	69.5	48.5	4860	2430	1620	1220	810	1214	810	607	486	374	324	304	286	270	256	243
1750	125	71.4	50.0	5000	2500	1670	1250	835	1250	833	625	500	385	333	312	294	278	263	250
1800	128	73.5	51.4	5140	2570	1720	1290	857	1286	857	643	514	396	343	321	303	286	271	257
1850	132	75.5	52.8	5290	2640	1760	1320	882	1321	881	661	529	407	352	330	311	294	278	264
1900	136	77.6	54.2	5430	2710	1810	1360	905	1357	905	679	543	418	362	339	319	302	286	271
1950	140	79.6	55.6	5560	2780	1860	1400	930	1393	929	696	557	429	371	348	328	310	293	279
2000	143	81.6	57.0	5710	2860	1940	1430	953	1429	952	714	571	440	381	357	336	317	301	286
2050	146	83.7	58.5	5860	2930	1960	1470	978	1464	976	732	586	451	390	366	345	325	308	293
2100	150	85.7	60.0	6000	3000	2000	1500	1000	1500	1000	750	600	461	400	375	353	333	316	300
2150	153	87.5	61.3	6130	3070	2050	1540	1030	1536	1024	768	614	472	409	384	361	341	323	307
2200	158	90.0	62.8	6280	3140	2100	1570	1050	1571	1048	786	629	483	419	393	370	349	331	314
2250	161	91.8	64.1	6420	3220	2150	1610	1070	1607	1071	804	643	494	429	402	378	357	338	321
2300	164	94.3	65.6	6580	3290	2190	1650	1100	1643	1095	821	657	505	438	411	387	365	346	329
2350	168	95.5	67.0	6710	3360	2240	1680	1120	1679	1119	839	671	516	448	420	395	373	353	336
2400	171	98.0	68.5	6850	3430	2290	1720	1150	1714	1143	857	686	527	457	429	403	381	361	343
2450	175	100	69.8	7000	3500	2340	1750	1170	1750	1167	875	700	538	467	437	412	389	368	350
2500	179	102	76.3	7150	3590	2480	1790	1200	1786	1190	893	714	549	476	446	420	397	376	357
	0.4	0.7	1.0	.5	1.0	1.5	2	3	0.04	0.06	0.08	0.10	0.13	0.15	0.16	0.17	0.18	0.19	0.20

TO USE THIS TABLE

Enter at top under U factor or No. of air changes determined from Table I and IA.
Read down to nearest value in sq. ft. or cu. ft.
Read to left to determine the B.t.u.'s/hr. required.

TABLE 2

B.t.u.'s/hr. REQUIREMENTS FOR AREAS AND VOLUME

Based on 35°F. difference between indoor and Outdoor temperature. For other temperatures see Table 2A

B.t.u.'s/hr. Required	WALL, CEILING AND FLOOR AREAS, SQ. FT.																					
	'U' FACTORS																					
	0.21	0.22	0.23	0.24	0.25	0.26	0.27	0.28	0.29	0.30	0.31	0.32	0.33	0.35	0.37	0.39	0.42	0.46	0.49	0.51	0.56	0.69
50	6.8	6.5	6.2	5.9	5.7	5.5	5.3	5.1	4.9	4.8	4.6	4.5	4.3	4.1	3.9	3.7	3.4	3.1	2.9	2.8	2.6	2.1
100	13.6	12.9	12.4	11.9	11.4	10.9	10.5	10.2	9.9	9.5	9.2	8.9	8.7	8.2	7.7	7.3	6.8	6.2	5.8	5.6	5.1	4.1
150	20.4	19.5	18.6	17.9	17.1	16.5	15.8	15.3	14.8	14.3	13.8	13.4	13.0	12.2	11.6	10.9	10.2	9.3	8.7	8.4	7.7	6.2
200	27.2	25.9	24.8	23.8	22.8	21.9	21.1	20.4	19.7	19.0	18.4	17.9	17.3	16.3	15.4	14.7	13.6	12.4	11.7	11.2	10.2	8.3
250	34.0	32.4	31.0	29.7	28.5	27.5	26.4	25.5	24.6	23.8	23.0	22.3	21.6	20.4	19.3	18.3	17.0	15.5	14.6	14.0	12.8	10.4
300	40.8	38.9	37.2	35.7	34.2	32.9	31.7	30.6	29.6	28.6	27.6	26.8	26.0	24.5	23.1	22.0	20.4	18.6	17.5	16.8	15.3	12.4
350	47.6	45.4	43.4	41.6	39.9	38.5	27.0	35.7	34.5	33.3	32.3	31.2	30.3	28.6	27.0	25.6	23.8	21.7	20.4	19.6	17.9	14.5
400	54.4	51.9	49.6	47.6	45.7	43.9	42.3	40.8	39.4	38.1	36.9	35.7	34.6	32.6	30.9	29.3	27.2	24.8	23.3	22.4	20.4	16.6
450	61.2	58.4	55.8	53.5	51.4	49.4	47.6	45.9	44.3	42.8	41.5	40.2	39.0	36.7	34.7	33.0	30.6	27.9	26.2	25.2	23.0	18.6
500	68.0	64.9	62.1	59.5	57.1	54.9	52.9	51.0	49.3	47.6	46.1	44.6	43.3	40.8	38.6	36.6	34.0	31.1	29.1	28.0	26.0	20.7
550	74.8	71.4	68.3	65.4	62.8	60.4	58.2	56.1	54.2	52.4	50.7	49.1	47.6	44.9	42.5	40.3	37.4	34.2	32.1	30.8	28.1	22.8
600	81.6	77.9	74.5	71.4	68.5	65.9	63.5	61.2	59.1	57.1	55.3	53.6	52.0	49.0	46.3	44.0	40.8	37.3	35.0	33.6	30.6	24.8
650	88.4	84.4	80.7	77.3	74.2	71.4	68.9	66.3	64.0	61.9	59.9	58.0	56.3	53.1	50.2	47.6	44.2	40.4	37.9	36.4	33.2	26.9
700	95.2	90.9	86.9	83.3	79.9	76.9	74.1	71.4	69.0	66.7	64.5	62.5	60.6	57.1	54.0	51.3	47.6	43.5	40.8	39.2	35.7	29.0
750	102	97.3	93.1	89.2	85.7	82.4	79.4	76.5	73.9	71.4	69.1	67.0	65.0	61.2	57.9	54.9	51.0	46.6	43.7	42.0	38.3	31.0
800	109	104	99.3	95.2	91.4	87.9	84.7	81.6	78.8	76.2	73.7	71.4	69.3	65.3	61.8	58.6	54.4	49.7	46.6	44.8	40.8	33.1
850	116	110	106	101	97.1	93.3	89.9	86.7	83.7	80.9	78.3	75.9	73.6	69.4	65.6	62.3	57.8	52.8	49.5	47.6	43.4	35.2
900	122	117	112	107	103	98.8	95.2	91.8	88.7	85.7	82.9	80.4	77.9	73.5	69.5	65.9	61.2	55.9	52.5	50.4	45.9	37.3
950	129	123	118	113	109	104	100	96.9	93.6	90.5	87.6	84.8	82.3	77.5	73.3	69.6	64.6	59.0	55.4	53.2	48.5	39.3
1000	136	130	124	119	114	110	106	102	98.5	95.2	92.1	89.3	86.6	81.6	77.2	73.3	68.0	62.1	58.3	56.0	51.0	41.4
1050	143	136	130	125	120	115	111	107	103	100	96.8	93.7	90.9	85.7	81.1	76.9	71.4	65.2	61.2	58.8	53.6	43.5
1100	150	143	137	131	126	121	116	112	108	105	101	98.2	95.2	89.8	84.9	80.6	74.8	68.3	64.1	61.6	58.7	45.5
1150	156	149	143	137	131	126	122	117	113	110	106	103	99.6	93.8	88.8	84.2	78.2	71.4	67.0	64.4	61.2	47.6
1200	163	156	149	143	137	132	127	122	118	114	111	107	104	97.9	92.6	87.9	81.6	74.5	69.9	67.2	63.8	49.7
1250	170	162	155	149	143	137	132	127	123	119	115	112	108	102	96.5	91.6	85.0	77.6	72.9	70.0	66.3	51.8
1300	177	169	161	155	149	143	138	133	128	124	120	116	113	106	100	95.2	88.4	80.7	75.8	72.8	68.9	53.8
1350	184	175	168	161	154	148	143	138	133	129	124	121	117	110	104	98.9	91.8	83.8	78.7	76.5	71.4	55.9
1400	190	182	174	167	160	154	148	143	138	133	129	125	121	114	108	103	95.2	86.9	81.6	78.4	74.0	58.0
1450	197	188	180	173	166	159	153	148	143	138	134	129	126	118	112	106	98.6	90.0	84.5	81.2	76.5	60.0
1500	204	195	186	179	171	165	159	153	148	143	138	134	130	122	116	110	102	93.2	87.4	84.0	79.1	62.1
1550	211	201	193	185	177	170	164	158	153	148	143	138	134	127	120	114	105	96.3	90.3	86.8	81.6	64.2
1600	218	208	199	190	183	176	169	163	158	152	147	143	139	131	124	117	109	99.4	93.2	89.6	84.2	66.2
1650	224	214	205	196	189	181	175	168	163	157	152	147	143	135	127	121	112	102	96.2	92.4	86.7	68.3
1700	231	221	211	202	194	187	180	173	167	162	157	152	147	139	131	125	116	106	99.1	95.2	89.3	70.4
1750	238	227	217	208	200	192	185	179	172	167	161	156	152	143	135	128	119	109	102	98.0	91.8	72.5
1800	245	234	223	214	206	198	190	184	177	171	166	161	156	147	139	132	122	112	105	101	94.4	74.5
1850	252	240	230	220	211	203	196	189	182	176	170	165	160	151	143	136	126	115	108	104	96.9	76.6
1900	258	247	236	226	217	209	201	194	187	181	175	170	165	155	147	139	129	118	111	106	99.5	78.7
1950	265	253	242	232	223	214	206	199	192	186	180	174	169	159	151	143	133	121	114	109	102	80.7
2000	272	260	248	238	229	220	212	204	197	190	184	179	173	163	154	147	136	124	117	112	105	82.8
2050	279	266	255	244	234	225	217	209	202	195	189	183	177	167	158	150	139	127	119	115	107	84.9
2100	286	273	261	250	240	231	222	214	207	200	194	187	182	171	162	154	143	130	122	118	110	86.9
2150	292	279	267	256	246	236	228	219	212	205	198	192	186	175	166	158	146	134	125	120	112	89.0
2200	299	286	273	262	251	242	233	224	217	209	203	196	190	180	170	161	150	137	128	123	115	91.1
2250	306	292	279	268	257	247	238	230	222	214	207	201	195	184	174	165	153	140	131	126	117	93.2
2300	313	299	286	274	263	253	243	235	227	219	212	205	199	188	178	168	156	143	134	129	120	95.2
2350	320	305	292	280	269	258	249	240	232	224	217	210	203	192	181	172	160	146	137	132	122	97.3
2400	326	312	298	286	274	264	254	245	236	229	221	214	208	196	185	176	163	149	140	134	125	99.4
2450	333	318	304	292	280	269	259	250	241	233	226	219	212	200	189	179	167	152	143	137	128	101
2500	340	325	311	298	286	275	265	255	246	238	230	223	216	204	193	183	170	155	146	140	130	104
	0.21	0.22	0.23	0.24	0.25	0.26	0.27	0.28	0.29	0.30	0.31	0.32	0.33	0.35	0.37	0.39	0.42	0.46	0.49	0.51	0.56	0.69

Partly based on figures published by The Institute of Boiler and Radiator Manufacturers, U.S.A.

TABLE 2A

CORRECTION TABLE for Temperature Differences Other Than 35° in B.t.u.'s/hr

35°F	20°F	25°F	30°F	40°F	35°F	20°F	25°F	30°F	40°F
500	285	355	430	570	3500	2000	2500	3000	4000
550	315	395	470	630	3550	2030	2535	3045	4060
600	343	430	515	685	3600	2058	2570	3085	4115
650	373	465	555	745	3650	2085	2605	3130	4170
700	400	500	600	800	3700	2115	2645	3170	4230
750	428	535	645	855	3750	2143	2680	3215	4285
800	458	570	685	915	3800	2173	2715	3255	4345
850	485	605	730	970	3850	2200	2750	3300	4400
900	515	645	770	1030	3900	2230	2785	3345	4460
950	543	680	815	1085	3950	2258	2820	3385	4515
1000	573	715	860	1145	4000	2285	2855	3430	4570
1050	600	750	900	1200	4050	2315	2895	3470	4630
1100	628	785	945	1255	4100	2343	2930	3515	4685
1150	658	820	985	1315	4150	2373	2965	3555	4745
1200	685	855	1030	1370	4200	2400	3000	3600	4800
1250	715	890	1070	1430	4250	2430	3035	3645	4860
1300	743	930	1115	1485	4300	2458	3070	3685	4915
1350	773	965	1155	1545	4350	2485	3105	3730	4970
1400	800	1000	1200	1600	4400	2515	3145	3770	5030
1450	828	1035	1245	1655	4450	2543	3180	3815	5085
1500	858	1070	1285	1715	4500	2573	3215	3855	5145
1550	885	1105	1330	1770	4550	2600	3250	3900	5200
1600	915	1145	1370	1830	4600	2630	3285	3945	5260
1650	943	1175	1415	1885	4650	2658	3320	3985	5315
1700	973	1215	1455	1945	4700	2685	3355	4030	5370
1750	1000	1250	1500	2000	4750	2715	3395	4070	5430
1800	1028	1285	1545	2055	4800	2743	3430	4115	5485
1850	1058	1320	1585	2115	4850	2773	3465	4155	5545
1900	1085	1355	1630	2170	4900	2800	3500	4200	5600
1950	1115	1395	1670	2230	4950	2830	3535	4245	5660
2000	1143	1430	1715	2285	5000	2858	3570	4285	5715
2050	1173	1465	1755	2345	5050	2885	3605	4330	5770
2100	1200	1500	1800	2400	5100	2915	3645	4370	5830
2150	1228	1535	1845	2455	5150	2943	3680	4415	5885
2200	1258	1570	1885	2515	5200	2973	3715	4455	5945
2250	1285	1605	1930	2570	5250	3000	3750	4500	6000
2300	1315	1645	1970	2630	5300	3030	3785	4545	6060
2350	1343	1680	2015	2685	5350	3058	3820	4585	6115
2400	1378	1715	2055	2745	5400	3085	3855	4630	6170
2450	1400	1750	2100	2800	5450	3115	3895	4670	6230
2500	1430	1785	2145	2860	5500	3143	3930	4715	6285
2550	1458	1820	2185	2915	5550	3173	3365	4755	6345
2600	1485	1855	2230	2970	5600	3200	4000	4800	6400
2650	1515	1895	2270	3030	5650	3230	4035	4845	6460
2700	1543	1930	2315	3085	5700	3258	4070	4885	6515
2750	1573	1965	2355	3145	5750	3285	4105	4930	6570
2800	1600	2000	2400	3200	5800	3315	4145	4970	6630
2850	1630	2035	2445	3260	5850	3343	4180	5015	6685
2900	1658	2070	2485	3315	5900	3378	4215	5055	6745
2950	1685	2105	2530	3370	5950	3400	4250	5100	6800
3000	1715	2145	2570	3430	6000	3430	4285	5145	6860
3050	1740	2180	2615	3480	6050	3460	4320	5185	6920
3100	1773	2215	2655	3545	6100	3485	4355	5230	6970
3150	1800	2250	2700	3600	6150	3515	4395	5270	7030
3200	1840	2285	2745	3680	6200	3543	4430	5315	7085
3250	1858	2320	2785	3715	6250	3573	4465	5355	7145
3300	1885	2355	2830	3770	6300	3600	4500	5400	7200
3350	1915	2395	2870	3830	6350	3630	4535	5445	7260
3400	1943	2430	2915	3885	6400	3658	4570	5485	7315
3450	1973	2465	2955	3945	6450	3685	4605	5530	7370
35°F	20°F	25°F	30°F	40°F	35°F	20°F	25°F	30°F	40°F

TO USE THIS TABLE

Enter under column headed 35°F
Read down to B.t.u.'s/hr. determined from Table 2.
Read across to the column which represents the indoor minus outdoor temperature difference for which the system is to be designed.

TABLE No. 3 FRICTION LOSS IN PIPES.

Friction Loss in Inches Water Gauge Per 10ft. of Pipe	QUANTITIES OF WATER IN LBS. PER HOUR FOR VARIOUS PIPES									
	NOMINAL BORE COPPER PIPES TO BS 659			NOMINAL BORE CLASS B BLACK STEEL PIPES						
	½″	¾″	1″	⅜″	½″	¾″	1″	1¼″	1½″	2″
0.036							263	483	777	1,700
0.040							283	520	837	1,833
0.045							303	553	893	1,950
0.050							320	583	950	2,067
0.060							350	647	1,033	2,273
0.070							389	703	1,133	2,473
0.080							417	753	1,230	2,670
0.090							437	807	1,300	2,830
0.10		200	450			180	467	850	1,383	3,000
0.12		220	500			200	513	940	1,530	3,317
0.14		240	560			220	557	1,017	1,660	3,570
0.16	93	260	600		120	240	600	1,100	1,783	3,680
0.18	100	280	650		140	265	637	1,167	1,900	4,080
0.20	105	300	700	70	150	290	673	1,243	2,000	4,330
0.23	110	320	750	78	170	315	730	1,333	2,167	4,670
0.26	118	345	800	82	190	340	780	1,430	2,300	5,000
0.30	123	370	870	90	210	370	843	1,550	2,530	5,417
0.35	140	420	950	100	230	410	917	1,677	2,673	5,830
0.40	152	470	1,050	106	250	450	987	1,807	2,930	5,330
0.45	165	500	1,120	110	270	480	1,050	1,930	3,100	6,670
0.50	180	530	1,200	115	290	515	1,116	2,033	3,270	7,100
0.60	200	600	1,300	128	310	570	1,233	2,210	3,600	7,770
0.70	220	660	1,400	145	335	620	1,333	2,407	3,920	8,500
0.80	240	720	1,500	165	360	690	1,433	2,600	4,200	9,070
0.90	260	780	1,650	180	390	740	1,533	2,750	4,500	9,700
1.0	280	830	1,800	190	410	800	1,633	2,930	4,750	10,300
1.2	310	980	1,950	205	480	900	1,767	3,230	5,250	11,330
1.4	350	1,050	2,060	220	530	1,000	1,927	3,500	5,700	12,330
1.6	380	1,100	2,200	240	580	1,060	2,070	3,770	6,170	13,270
1.8	400	1,150	2,400	270	610	1,100	2,200	4,000	6,570	14,100
2.0	420	1,180	2,600	290	640	1,150	2,330	4,230	6,930	15,000
2.3	440	1,220	2,800	310	700	1,240	2,530	4,570	7,500	16,070
2.6	480	1,350	3,000	330	750	1,350	2,700	4,900	8,000	17,330
3.0	530	1,500	3,300	360	810	1,500	2,920	5,270	8.670	18,670
3.5	590	1,750	3,650	400	890	1,680	3,170	5,750	9,330	20,330
4.0	630	2,000	4,000	430	980	1,850	3,400	6,170	10,000	21,670
4.5	685	2,200	4,250	470	1,030	2,050	3,600	6,600	10,670	23,170
5.0	720	2,400	4,500	495	1,100	2,200	3,830	7,000	11,330	24,530
6.0	800	2,600	5,000	540	1,150	2,400	4,200	7,670	12,570	
7.0	880	2,800	5,300	600	1,200	2,750	4,570	8,330	13,670	
8.0	950	3,050	5,800	655	1,350	3,000	4,900	9,000		
9.0	1,010	3,250	6,200	700	1,410	3,150	5,230	9,530		
10.0	1,050	3,500	6,500	740	1,520	3,300	5,570			
12.0	1,110	4,100	7,300	800	1,850	3,600	6,170			
14.0	1,170	4,700	7,800	850	2,100	4,000				
16.0	1,250	5.000	8,500	900	2,300	4,500				

V= 6.0″/sec.

V= 12.0″/sec.

V= 24.0″/sec.

V= 36.0″/sec.

V=36.0″/sec.

NOTES :—For Residences the Velocity (V) should not Exceed 36.0″ per second.

INSTALLATION DIMENSIONS OF SIGMUND THERMOPAK

NOTE:- THE CIRCULATOR MAY BE INSTALLED IN A HORIZONTAL, VERTICAL OR ANGLED PIPE RUN PROVIDING THE AXIS 'XX' IS KEPT HORIZONTAL.

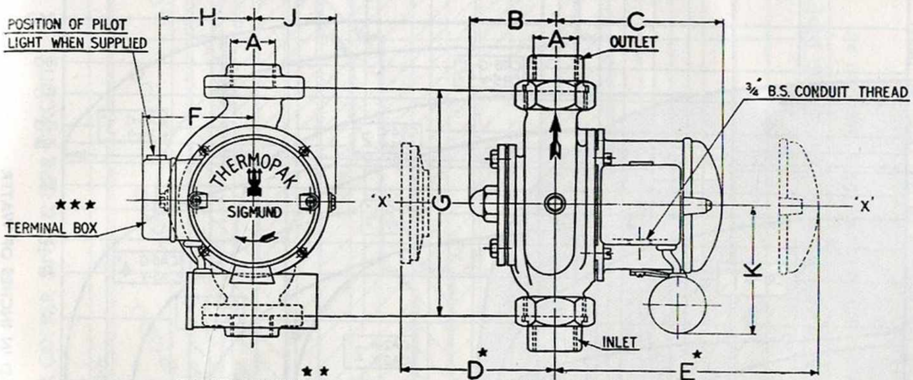

★★ FLANGED CONNECTIONS FOR ALL TYPES EXCEPT CR1, CA1 & CP2

SCREWED CONNECTIONS FOR TYPE CR1, CA1 & CP2

★ CLEARANCE FOR DISMANTLING

★★ SCREWED COUNTER FLANGES SUPPLIED

★★★ STANDARD POSITION CAN BE ALTERED ON SITE

FLANGE DETAILS B.S.T. 'A'

BORE	OUTSIDE DIA.	BOLT DIA	P C D.	No OF BOLTS
1½	5¼	½	3⅞	4
2	6	⅝	4½	4
2½	6½	⅝	5	4
3	7¼	⅝	5¾	4
4	8½	⅝	7	4

ALL DIMENSIONS IN INCHES

TYPE	PIPE CONNECTION	BRANCHES A B.S.P.T. INLET	BRANCHES A B.S.P.T. OUTLET	B	C	D★	E★	F	G	H	J	K	
CR1	SCREWED	1	1	3	6½	7	9½	4	8	3⅛	2¾	5	
CP2	SCREWED	1¼	1¼	3	6	7	10	4	8	3⅛	3⅛	5	
CR3	FLANGED	1½	1½	3¾	8	9	13	5½	11	4⅛	3⅞	7	
CR4	FLANGED	2	2	4⅜	8⅝	11	13½	5½	13½	4⅝	4⅛	7	
CR5	FLANGED	2½	2½	4¾	11	13	14	6	17	5⅝	4¾		
CR6	FLANGED	3	3	6	11	15	15	6	18	6½	5⅜		
CA1	SCREWED	1¼	1¼	3	6½	7	9½	4	8	3⅜	2⅞	5	
CA2	FLANGED	2	2	3¼	7½	9	11	4	10	4	3⅜	5	
CA3	FLANGED	2½	2½	5	8¼	11½	13½	5½	14	5¼	4¼	7	
CA4	FLANGED	3	3	6¼	9	15	13¾	5½	15½	6⅜	5⅜	7	
CA5	FLANGED	4	4	5¾	11½	17	14½	6	18½	7⅛	5⅞		

CHART No. 4

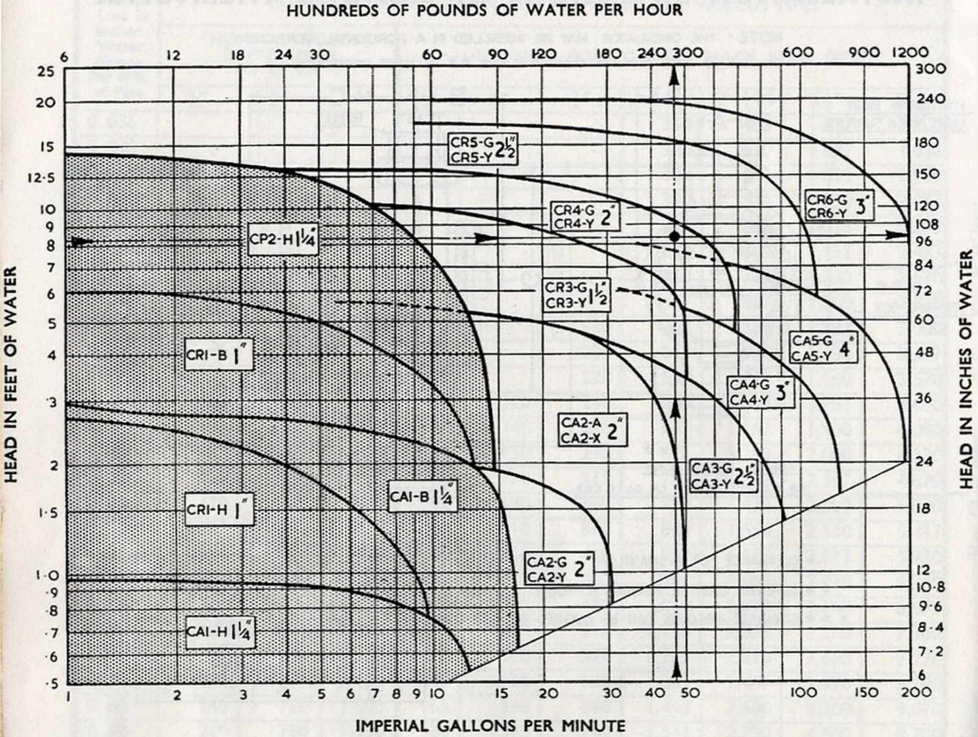

SHADED AREA SHOWS DOMESTIC RANGE

THE SUFFIX LETTER AFTER THE PUMP TYPE INDICATES POWER OF MOTOR AND VOLTAGE FOR WHICH IT IS SUITABLE.

KEY FOR SUFFIX LETTER

USE LETTER **A** OR **G** FOR 230/250 V. I PH. A.C.
" " **X** OR **Y** FOR 200/220 V. I PH. A.C.
" " **B** OR **H** FOR 200/250 V. I PH. A.C. (Domestic Range Models)

Accelerator types CR3, CR4, CR5, CR6 and CA3, CA4, CA5 are also made for 3 phase 400/440 volts in which case use suffix letter G and add the figure 3, i.e. CR6-G3.

TO USE THIS CHART

Find the head required on the vertical scale and take a horizontal line across the chart.

Find the quantity of water required on the horizontal scale and take a vertical line across the chart.

The point of intersection lies in an area marked with pump type and branch size.

Further details of ThermoPak Accelerators can be obtained from Sigmund Pumps Ltd., Gateshead, 11.

TABLE No. 5 FOR THERMOPAK CRI WITH $\frac{3}{8}''$ CLASS B STEEL & $\frac{1}{2}''$ NOM. BORE COPPER SINGLE PIPE CIRCUITS.

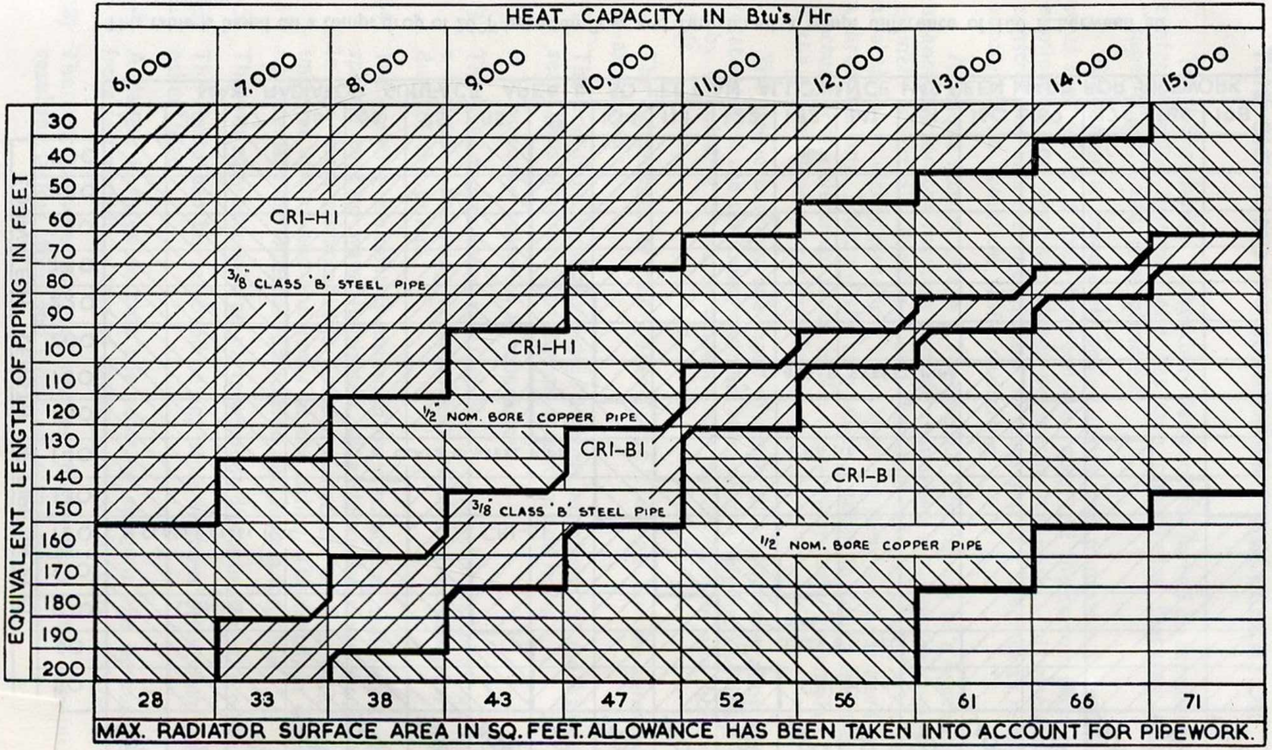

This table is based on a temp. drop of 20°F between flow and return and a temp. difference of 100°F between air and radiators.

HOW TO USE THIS TABLE

Find the required equivalent length of pipe in the left hand column and move horizontally to the required heat capacity. The point reached is in an area marked with pump type and pipe size.

TABLE No. 5A FOR THERMOPAK CRI WITH ½" & ¾" CLASS B STEEL SINGLE PIPE CIRCUITS.

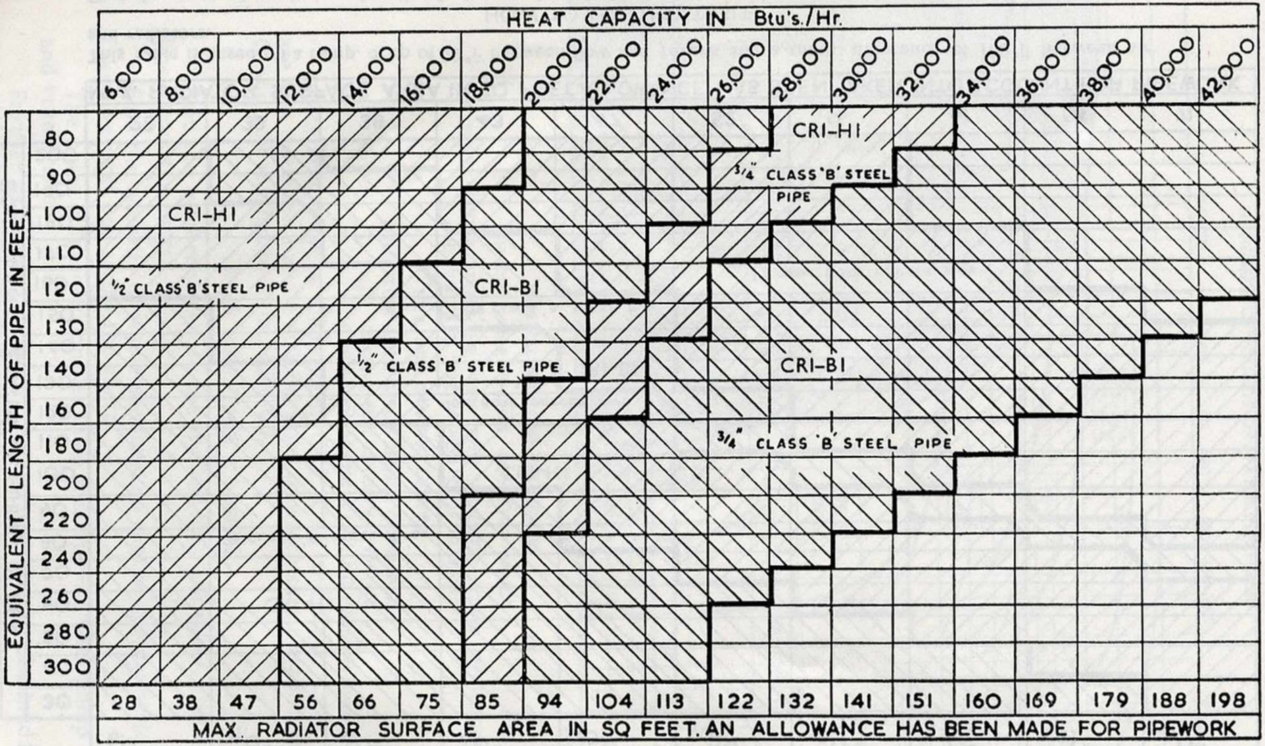

This table is based on a temp. drop of 20°F between flow and return and a temp. difference of 100°F between air and radiators.

HOW TO USE THIS TABLE

Find the required equivalent length of pipe in the left hand column and move horizontally to the required heat capacity. The point reached is in an area marked with pump type and pipe size.

THE SIGMUND " THERMOPAK " ACCELERATOR

The " ThermoPak " is specially designed for forced or accelerated central heating systems, and has two outstanding features. It is " super-silent " and it is glandless.

The water is completely sealed inside the pump by a stainless steel shell which is fixed between the rotor and the stator, thereby eliminating the need for glands or mechanical seals. This glandless construction means that there are no leaks and the ThermoPak needs absolutely no attention while operating.

A unique feature of the " ThermoPak " is the use of a hydraulic balance disc on the rotating part, so that when running the rotating element is virtually floating round the fixed centre spindle, with no axial thrust in either direction, thereby doing away with the need for a thrust bearing. This, and the care which is taken in design and manufacture of the electrical parts, is the reason why the " ThermoPak " is the most silent pump running.

The sleeve bearings are made of a special non-ferrous alloy and rotate around the stationary stainless steel centre spindle. Lubrication is by circulation of water between the centre spindle and hollow shaft.

The advantages of the " ThermoPak " design can be summed up as follows :

(1) The unit is hermetically sealed and has no glands or mechanical seals, thus eliminating periodical attention and leaks.

(2) It is virtually noiseless in operation.

(3) The axial thrust from the impeller or propeller is taken up by a hydraulic balancing arrangement which is functional for any duty of the pump.

(4) The rotating element is mounted on a stationary stainless steel spindle by two water-lubricated alloy sleeve bearings, situated in the most advantageous positions directly in line with the impeller at one end and rotor at the other. The bearings need no attention or external lubrication and have a long life.

(5) There is easy access to all parts without disconnecting the pipes.

(6) The stator can be removed at any time without disturbing any other part.

(7) A device is fitted so that the rotating element can be turned from the outside in case of sticking or for checking rotation.

(8) The unit is more compact and less heavy than other designs, resulting in less stress and vibration in the pipe-work.

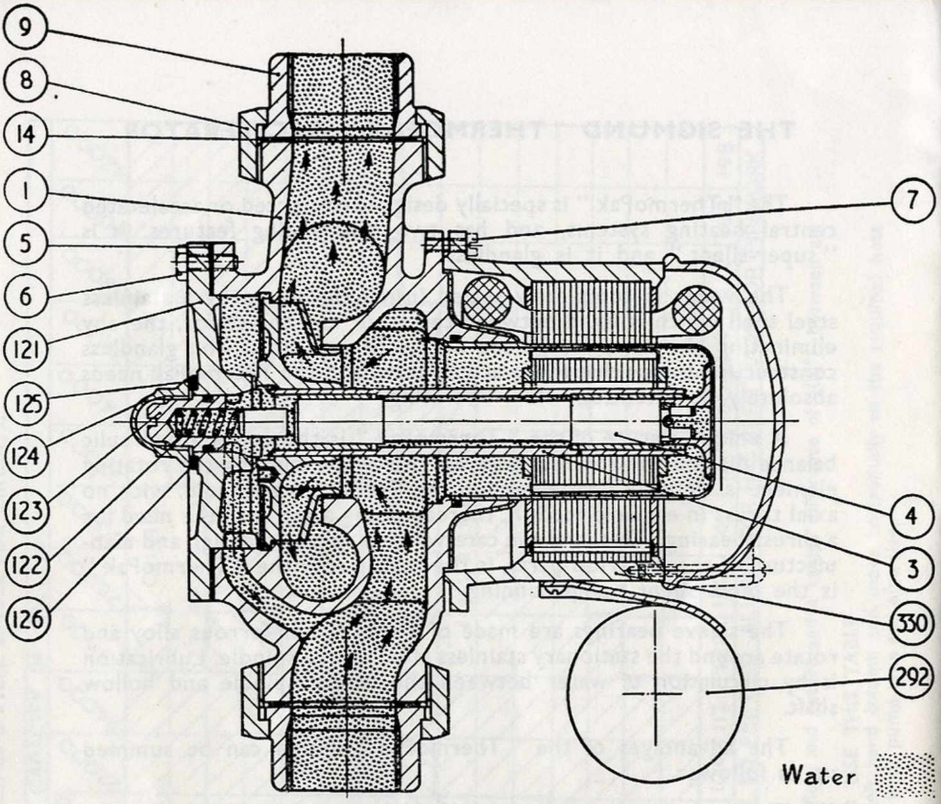

Fig. 8. **Sectional View of "ThermoPak"**

Patent No. 731585

Item No.	Description	Item No.	Description	Item No.	Description
1	Pump Casing	8	Union Nut (Suct. & Disch.)	124	End Cover Nut
3	Rotating Element	9	Union Tail (Suct. & Disch.)	125	End Cover Washer
4	Fixed Spindle	14	Suct. & Disch. Joint	126	'O' Ring for Clutch
5	End Cover Joint	121	End Cover	292	Condenser
6	End Cover Bolts	122	Spring	330	Stator Motor
7	Stator Fixing Screws	123	Clutch		

A notable feature of the "ThermoPak" is what may be called the "Hollow Shaft Design," i.e. the rotating shaft with the impeller and rotor mounted on it is hollow and rotates around the stationary centre spindle, which is rigidly held at both ends. This design enables the bearings to be placed in the most advantageous positions directly in line with the impeller and rotor, and ensures perfect alignment and stable smooth running throughout the life of the pump.

Once installed (simply by connecting into the pipe line in any convenient space) the unit will run without attention and when necessary can be serviced or inspected simply by removing the end cover or stator as required.

Further details of ThermoPak Accelerators can be obtained from Sigmund Pumps Ltd., Gateshead, 11.

TABLE 6

HEAT EMISSION FROM PIPES AND RADIATORS

B.t.u.'s per foot for 100°F temperature difference

Pipe Size (Nominal Bore) inches	UNLAGGED			LAGGED
	Bright Copper	Painted Copper	Steel	Copper & Steel
⅜	—	—	44	18
½	25	38	56	22
¾	36	58	70	28
1	43	72	80	32
1¼	50	87	98	39
1½	54	95	110	44
2	66	120	129	52
2½	—	—	154	62
3	—	—	188	75
4	—	—	232	93

AVERAGE RADIATOR TRANSMISSIONS FOR CAST-IRON AND STEEL RADIATORS

B.t.u. per sq. ft. per hour.

Type of Radiator	Width in.	Emission B.t.u.'s/hr/sq. ft.
Column radiators	2½ to 3¾	185
	5 to 5⅝	170
	7½ to 8⅝	160
Hospital pattern	3 to 3½	185
	5 to 5¾	158
	7 to 7½	151
Cast iron window radiators	13 to 13½	158
Wall radiators	Cast-iron	171
	Steel (single panel)	192

Reproduced from the British Code of Practice C.P. 341.300-307 : 1956.

GENERAL INFORMATION

Size of Feed and Expansion Tanks.

Boiler Rating B.t.u.'s/hr.	Tank Size Gallons	Ball Valve size Ins.	Open-vent size Ins.	Overflow size Ins.	Cold Feed Size Ins.
50,000	10	½	1		¾
75,000	10	½	1	1¼	¾
100,000	15	½	1	1¼	¾
150,000	15	½	1	1¼	¾
200,000	20	½	1	1¼	¾
250,000	25	½	1¼	1¼	1

Hot Water Supply—Sizes of Primary Flow and Return.

For sizing the primary flow and return pipework between boiler and indirect cylinder for Indirect systems the following table may be used as a guide and is based on the indirect cylinder being (a) adjacent to the boiler or (b) on the floor above the boiler but over the boiler.

Size	Maximum B.t.u.'s/hr. transmitted.	
	Centre Indirect Cylinder 4′ above centre boiler	Centre Indirect Cylinder 9′ above centre boiler
1″	24,000	32,000
1¼″	41,000	58,000
1½″	61,000	94,000
2″	120,000	200,000

SIGMUND

ThermoChange*

If you are installing a new central heating system, or a new cooker incorporating a boiler, the Sigmund ThermoChange* external calorifier converts a direct hot water system to indirect, using the existing cylinder.

It's easy to fit . . .

Only two connections needed to fit the Sigmund ThermoChange* to any existing 20-40 gallon cylinder.

No connections to the cold water mains.

No pipe connections to change.

Special self-filling feature ; no separate feed tank or expansion pipe necessary.

No need to re-position immersion heaters.

It's Simple . . .

The Sigmund ThermoChange* is a simple compact unit, incorporating a highly efficient annular heat exchanger which has its own built-in feed and vent pipe.

Interchange of water between the primary and secondary water is virtually eliminated and no external feed or vent pipes to the primary circuit are required.

It's Efficient . . .

The Sigmund ThermoChange* special annular element achieves heat transfer at an average rate of 20,000 B.t.u.'s per hour in a 2-hour re-heat cycle.

It's Neat . . .

Only 7¼″ diameter × 21¾″ high, the Sigmund ThermoChange* can usually be fitted easily alongside the existing cylinder.

*** The Sigmund ThermoChange, developed by Sigmund Pumps Limited.**
Provisional Patent No. 31558.

The Sigmund *ThermoChange* fits into the system

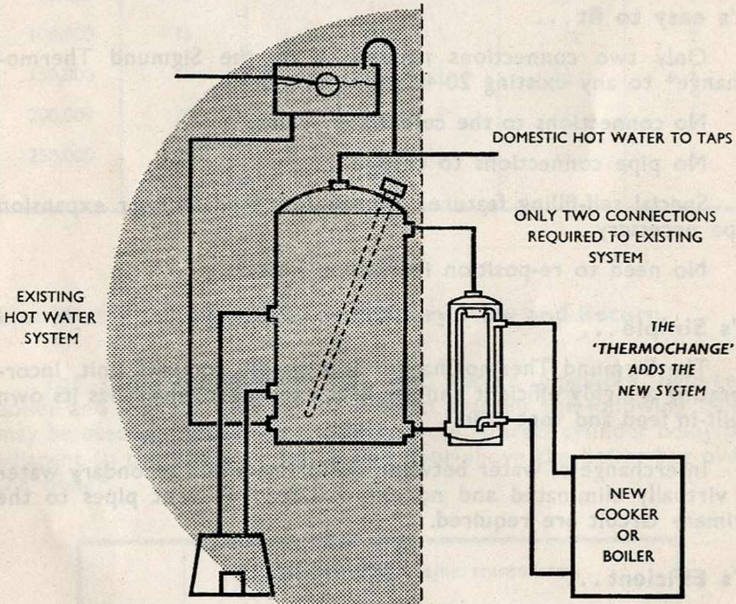

Note : Hot water from the primary circuit will not mix with the secondary water because it cannot rise out of the annular heater due to the small air pocket around the tap, nor can it flow down the vent because the primary water is always hotter.

Publication 1032 Issue 3 3/59 Call 10M